Peter W.M. Ewart

CONSULTING STRUCTURAL ENGINEER

B.E, M.I.P.E.N.Z

"Creative Technological Solutions with Integrity"

7 - Ninth Avenue
Tauranga, New Zealand
phone 07-578-8963
fax 07-571-8305
e-mail - peter.ewart@clear.net.nz

Project 7937
5-May-09

PRODUCER CERTIFICATE

Amendment Received
07 MAY 2009
Tauranga City Council

Issued by Peter William Morton EWART to :

The Manager, Building Services, Tauranga City Council

in respect of the above job : -

Design to Bracing posts in carport for Mr and Mrs P Smith
at 179B Dickson Rd, Papamoa

Peter W.M.Ewart has been engaged to provide structural design services in respect of the requirements of Clause B 1 of the Building Regulations 1992 for all the works listed on the summary sheets (S) of the attached calculations only, for the intended life of the building.

This design has been prepared in accordance with B 1 / VM 1 of the approved documents as shown on plans that have been countersigned by me. This signature indicates that the elements designed are drawn so as to adequately and correctly portray my structural design intentions.

As an independent design professional covered by a current policy of Professional Indemnity Insurance to a minimum value of $200,000 I BELIEVE ON REASONABLE GROUNDS that subject to :-

1. The verification of the design assumptions for soils on site: -
2. All proprietary products meeting the performance specification requirements.

That the drawings, specifications and other documents for which we are responsible, comply with the relevant provisions of the building code.

This certificate does not include Stability, Suitability of the site OR Weathertightness OR Durability of the structure.

Only the extent of work covered by this producer certificate has been checked for compliance with the Building Code.

Ground conditions - Unless otherwise stated in the summary sheets (S) as mentioned above we have assumed that the "good ground" conditions of NZS 3604 apply to this design.

We have not confirmed this on site and have not made a site visit unless stated in the summary sheets (S) as above. Confirmation that the site is suitable for this structure remains the responsibility of others.

This certificate is for the intended life of the building but is only valid if the building consent application is made within two years of its issue

My Practice Area is the design of small structures and minor allied civil work.

Peter W.M. Ewart, ***B.E, MIPENZ , CPEng NO 12880***

Director, Ewart Consultants Ltd - trading as Peter WM Ewart, Consulting Structural Engineer.

There are ....4.... Summary sheets included with this Certificate including this one.

Peter W.M.Ewart

CONSULTING STRUCTURAL ENGINEER BE MIPENZ

7 Ninth Ave, Tauranga, NZ
ph 07-578 8963
fax 07-571 8305

7937
5/05/2009

Design to Bracing posts in carport for Mr and Mrs P Smith at 179B Dickson Rd, Papamoa

S.1

House is in a High Wind Area to 3604

Designed 05-May-09
Amended 05-May-09

Design to the following elements :

1./ *Assess bracing demand* **1.1**

*** Provide 46 BU's wind resistance along building , 32 BU's EQ**
*** Wind BU's across carport provided by existing house, EQ by posts**

2./ *Design posts* **2.1**

*** Use a 140*140 to each 2.4 m high post to give 17 B.U's Wind and 26 B.U's EQ to NZS 3604 1999 - H/300.**
*** Embed in 450 square or round hole to 1.4 m in 1.5 m deep hole below floor or top of footing level**
*** At top use Bowmac B38 OR B48 brackets to bearer or check in bearer and use 2/M12 bolts.**
*** Place posts in 300*300 strip footing with 4/D12 and R6 stir at 400 - 150*150 ID OR place posts in concrete floor.**
*** Spread steel round each side of post preserving 75 cover - Use 3 posts as shown on the attached plan.**

Amendment Received
07 MAY 2009
Tauranga City Council

7937/A

Application Received
07 MAY 2009
Tauranga City Council

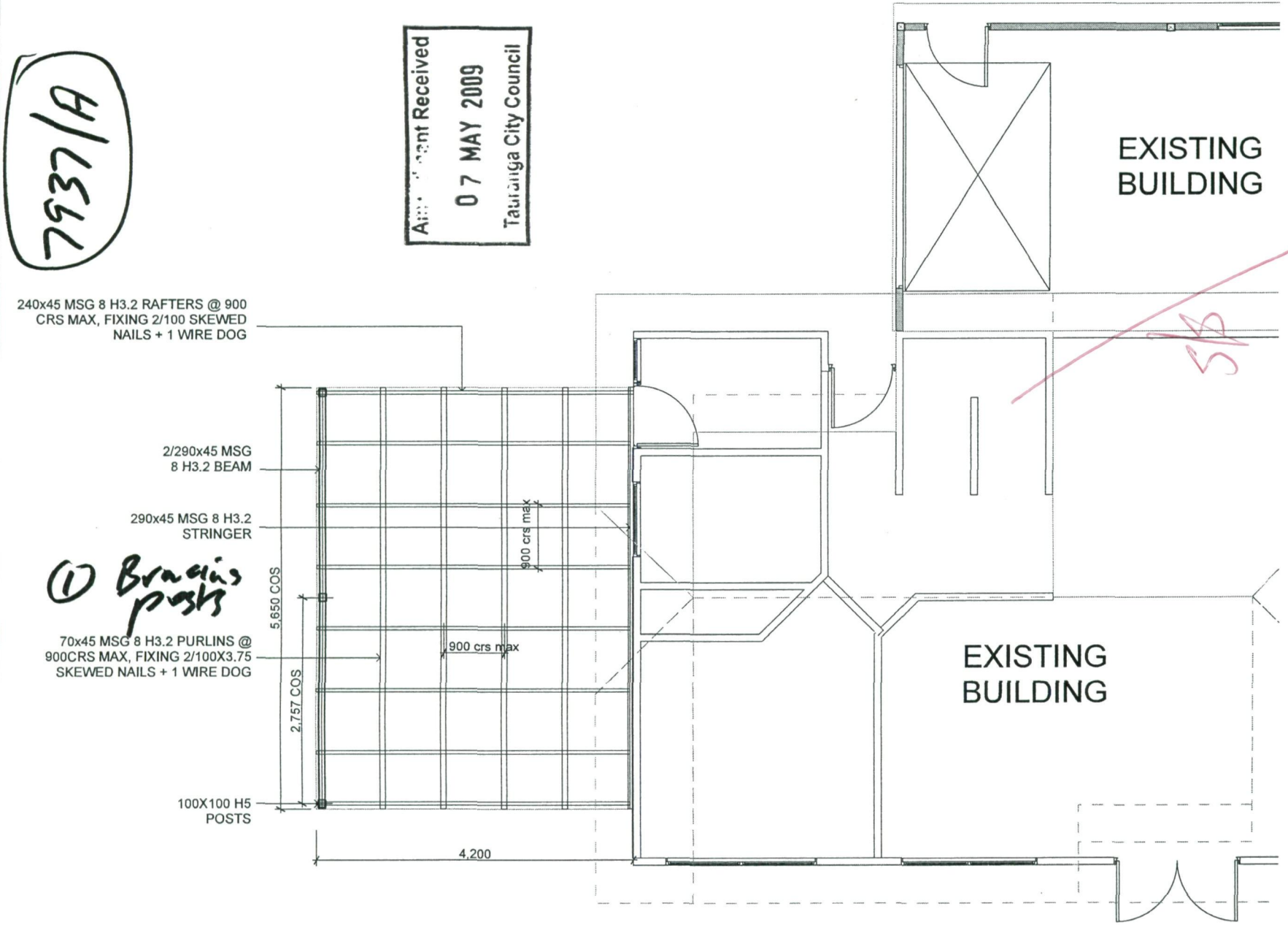

ROOF FRAMING PLAN
SCALE 1:50

GENERAL NOTES :

a. All works to comply with NZS3604-1999 A2 and the NZ Building Code and best trade practices.
b. All Drawings to be read inconjunction with engineers drawings/report.
c. The Contractor shall supply and fix all necessary flashing and sealants to provide a completely weather tight building.
d. Refer to all written notations do not scale off drawings.
e. Contractor to check all dimensions and verify all levels on site before proceeding with works. If any discrepancies are found contractor is to contact B Filmer for clarification.

Job Title
Alteration

For
Mr & Mrs P Smith

At
179B Dickson Rd
Papamoa

B Filmer, 07-5422212
75 Wairakei Ave, Papamoa

Drawn	B Filmer
Checked	N/A
Creation Date	02/05/06
Plot Date	4/29/2009

Drawing Title
ROOF FRAMING PLAN

Drawing Number	Scale
03	1:50

ALL DIMENSIONS TO BE VERIFIED ON SITE

The copyright of this drawing remains the property of B Filmer

7937/B

Amendment Received
07 MAY 2009
Tauranga City Council

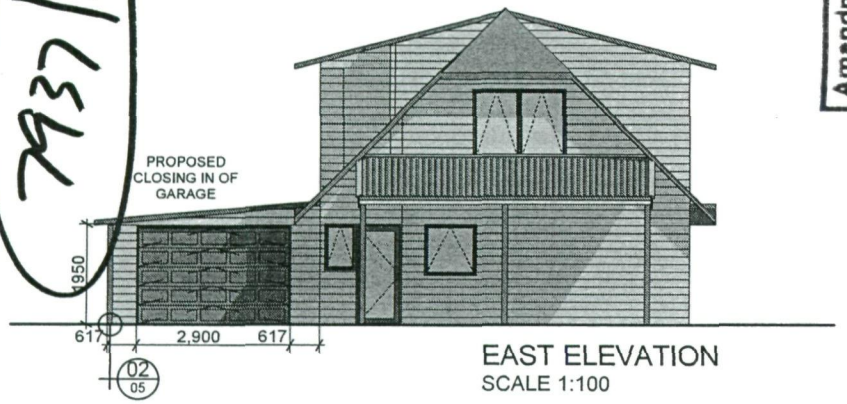

EAST ELEVATION
SCALE 1:100

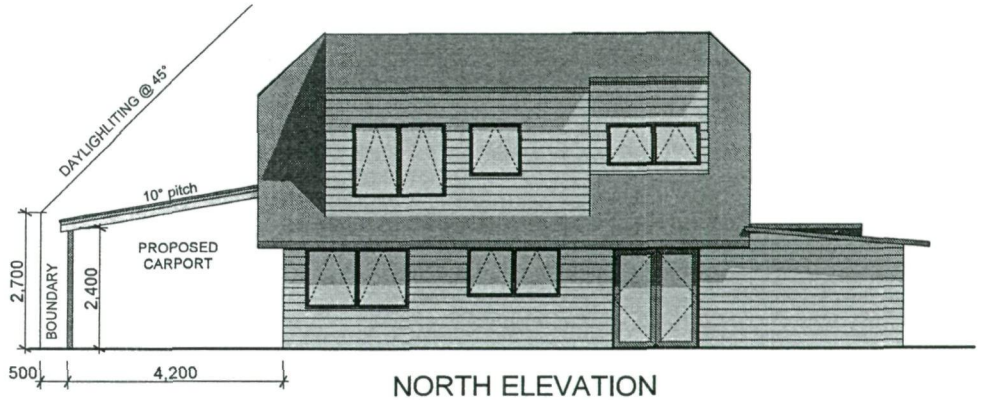

NORTH ELEVATION
SCALE 1:100

NOTE:
ROOF HEIGHT AND PITCH TO BE CHECKED ON SITE TO ENSURE 100mm UPSTAND OF FLASHING UNDER EXISTING WINDOW

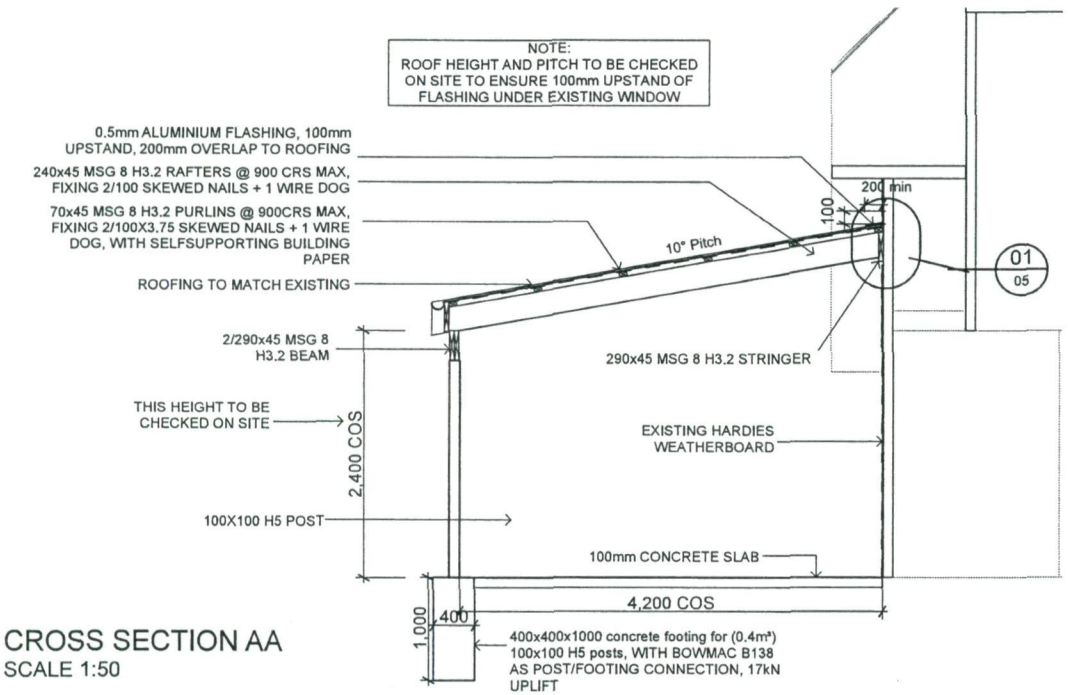

CROSS SECTION AA
SCALE 1:50

GENERAL NOTES :

a. All works to comply with NZS3604-1999 A2 and the NZ Building Code and best trade practices.
b. All Drawings to be read inconjunction with engineers drawings/report.
c. The Contractor shall supply and fix all necessary flashing and sealants to provide a completely weather tight building.
d. Refer to all written notations do not scale off drawings.
e. Contractor to check all dimensions and verify all levels on site before proceeding with works. If any discrepancies are found contractor is to contact B Filmer for clarification.

Job Title
Alteration

For
Mr & Mrs P Smith

At **179B Dickson Rd**
Papamoa

B Filmer, 07-5422212
75 Wairakei Ave, Papamoa

Drawn	B Filmer
Checked	N/A
Creation Date	02/05/06
Plot Date	4/9/2009

Drawing Title
CROSS SECTION AND ELEVATIONS

Drawing Number	Scale
04	1:100, 1:50

ALL DIMENSIONS TO BE VERIFIED ON SITE

The copyright of this drawing remains the property of B Filmer

Peter W.M.Ewart

CONSULTING STRUCTURAL ENGINEER BE MIPENZ

7 Ninth Ave, Tauranga, NZ
ph 07-578 8963
fax 07-571 8305

7937
5/05/2009

1./ *Assess bracing demand* **1.1**

Calculate Bracing requirements

						Deck divider			
EQ	***EQ Area***	4.2	x5.70	=23.94	64.64	/ 2.00	= 32.32		
		0	x0.00	=0.00	Attached to house 1 side				
	BU's per m^2		*contributing*	=23.94	32.32	/ 1.00	= 32.32	BU's	
=23.94	x2.70	=64.64			**OR**	/ 20.00	= 1.62	kN	
32.32	/ 3.00	= 10.77		BU's each post - OR =		/ 20.00	= 0.54	kN per post	

Wind	b	* d	* Cp	* q	Total b*d*Cp*q =		kN	BU's/kN		
Along	4.40	x0.25	x1.30	x1.16			=1.66	x20.00	=33.18	BU's
Along	0.00	x3.20	x1.30	x1.16			=0.00	x20.00	=0.00	BU's
Along	0.00	x1.80	x1.30	x1.16			=0.00	x20.00	=0.00	BU's
Assymetry factor from BRANZ TR5 is 1.4				=46	=46	x1.40	<===	Total	=33.2	BU's
(Assymetry of elements of resistance)				provided	0	Total, kN*AF=	2.32	provided	0	
46.45	/ 3.00	= 15.48		extra reqd =	46.4	RND (1)	2.3	extra reqd =	33.2	
Wind	b	* d	* Cp	* q	Total b*d*Cp*q =		kN	BU's/kN		
Across	15.00	x1.80	x1.30	x0.82			=28.78	x20.00	=575.64	BU's
Across	15.00	x1.90	x0.60	x0.82			=14.02	x20.00	=280.44	BU's
Across	0.00	x0.70	x1.30	x1.16			=0.00	x20.00	=0.00	BU's
Assymetry factor from BRANZ TR5 is 1.4				=1199	=1199	x1.40	<===	Total	=856.08	BU's
(Assymetry of elements of resistance)				provided	1675	Total, kN*AF=	59.93	provided	1675	
				extra reqd =	-476.5	RND (1)	59.9	extra reqd =	-818.9	

*** Provide 2.3 KN resistance along building OR 46 BU's - Wind.**

*** Wind BU's across carport provided by existing house, EQ by posts**

Amendment Received
07 MAY 2009
Tauranga City Council

Peter W.M.Ewart

CONSULTING STRUCTURAL ENGINEER BE MIPENZ

7 Ninth Ave, Tauranga, NZ
ph 07-578 8963
fax 07-571 8305

7937
5/05/2009

2./ *Design posts* **2.1**

Design bracing element consisting of post embedded in ground

Try		I	Z						M*1.53 \/
140	140	32.01	457.3333		**Height column =**	**2.4**	Mu - nc	MU OK	3.77
					Depth embed, m =	**1.5**	Mu - c	MU OK	3.60
Poles to DZ 4203 [TRADA Formula]					**Dia. embed, m =**	**0.45**	**Total Deflection =**		
L - m	2.40	S=K1.w.d	37.60		**Load to top (Pu) =**	**1.50**	nc	c	
P - kN	0.98	A=k2P/SB	0.07		**I column =**	**32.01**	31.87	23.05	
(P=Pu/1.53)		H nc-m =	0.67	OK	**E column =**	**8**	Allowable =	8	
B - m	0.45	Rot@base	0.005931	M*1.53 \/	Therefore B.U.'s provided =		Allow. = H/	300	
D - m	1.5	Def attop	14.23	3.77	P*20*Allowable/Total deflection		H/300 and 150 =	8.00	16.00
Gam.kN/m^3	16	M max =	2.46	3.60	B.U.'s =	**6.81**	c	2*H/150=	32.00
Check Mu	phi = 0.8	H c-m =	0.77	OK	Round	**7**	**=> To NZS 3604:1984**		
f'b =	14.00	Rot@base	0.002253	**Assess B.U's to NZS 3604:1990 to Branz TR10**					26
Z =	457.3333	Def attop	5.41	S = F(k1=1.4)	0.5	**EQ**	k4*R =	1.28	**B.U's**
M N =	5.12	M at flr=	2.35	C =	0	OK	F/k4/.48 =	1.65	**25.61**
Ca Span	L1 = 2.4	**M*1.53 =**	**3.6**	P=R=Ld,f'b	2.1	**Wind**	0.9*P =	1.92	**B.U's**
I column =	32.01333	Ld2P toCa	0.98	y= Def at P	50.2		F/0.563 =	0.85	**16.92**
E column =	8	Dca 2 =	17.640	d = y/2, so u = 2.0 therefore k4 = 0.6, and k1 = 1					17

*** Use a 140*140 to each 2.4 m high post to give 7 B.U's Wind and EQ to NZS 3604 - H/300.**

*** Use a 140*140 to each 2.4 m high post to give 17 B.U's Wind and 26 B.U's EQ to NZS 3604 1999 - H/300.**

*** Embed in 450 square or round hole to 1.4 m in 1.5 m deep hole below floor or top of footing l** | 125 | 125 | 18.50 | 300 |

*** At top use Bowmac B38 OR B48 brackets to bearer or check in bearer and use 2/M12 bolts.**

*** Place posts in 300*300 strip footing with 4/D12 and R6 stir at 400 - 150*150 ID OR place posts in concrete floor.**

*** Spread steel round each side of post preserving 75 cover - Use posts as shown on the attached plan.**

Amendment Received
07 MAY 2009
Tauranga City Council

BOWMAC Structural Brackets

POST BEAM CONNECTIONS.

BOWMAC B35, B38, B46 & B48

Amendment Received
19 MAR 2009
Tauranga City Council

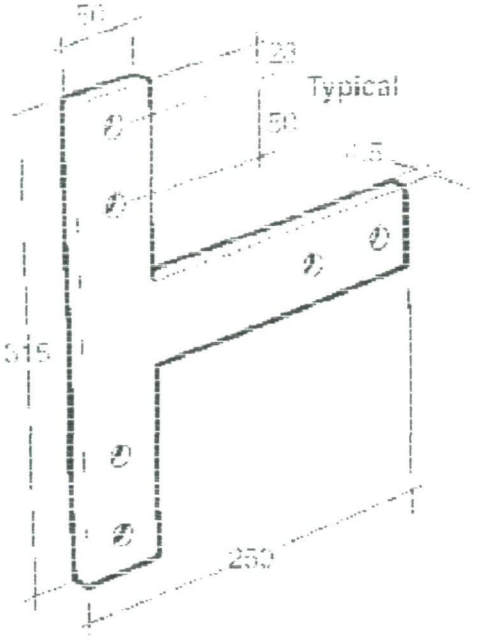

BOWMAC B35

Bolt holes accommodate **M12** Bolt.

Similar also available in Stainless Steel 304-2B.

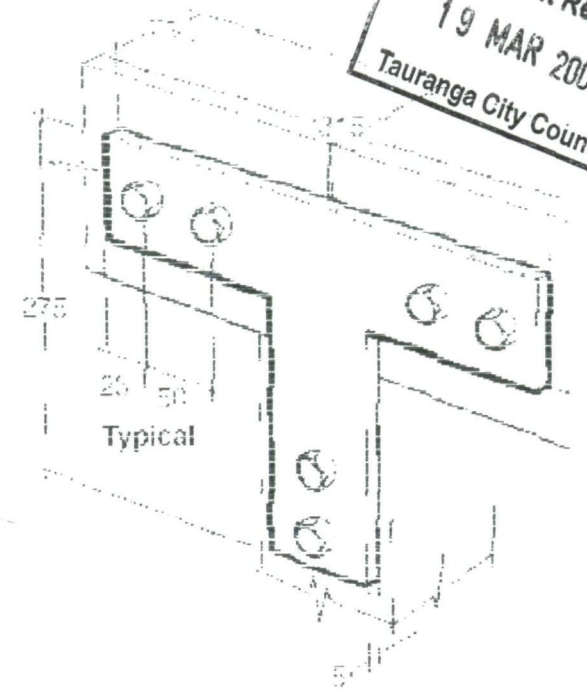

BOWMAC B38

(Bolts Not Included)

Bolt holes accommodate **M12** Bolt.

Similar also available in Stainless Steel 304-2B

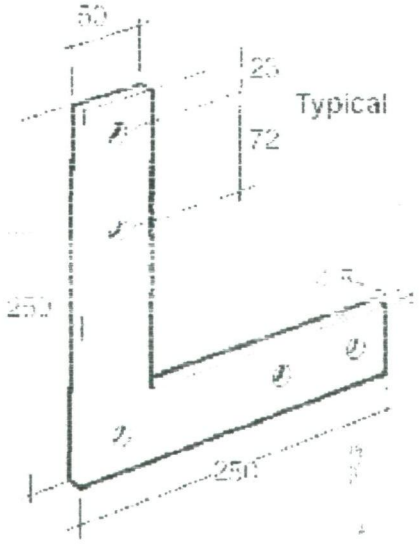

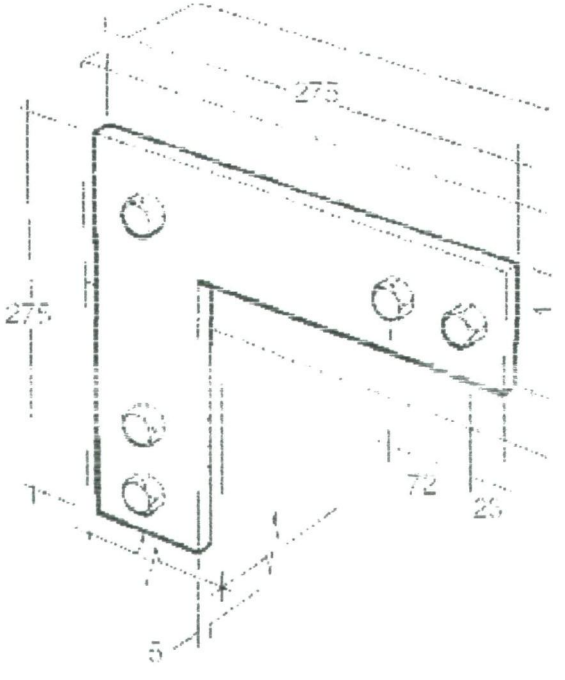

Amendment Received
19 MAR 2009
Tauranga City Council

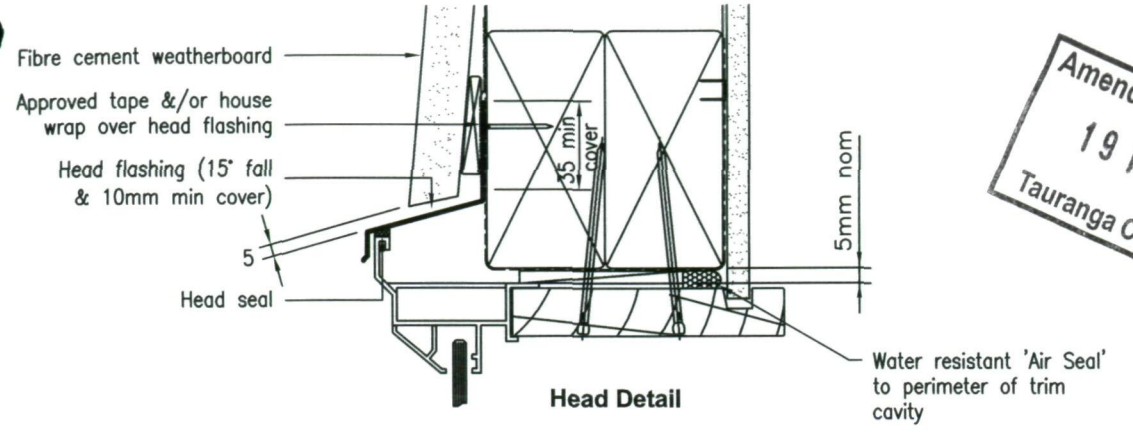

Head Detail

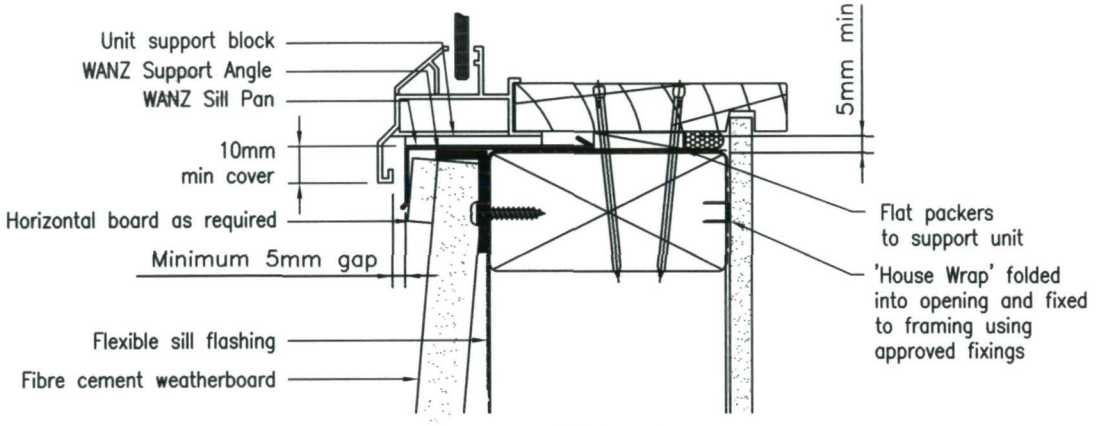

Sill Detail

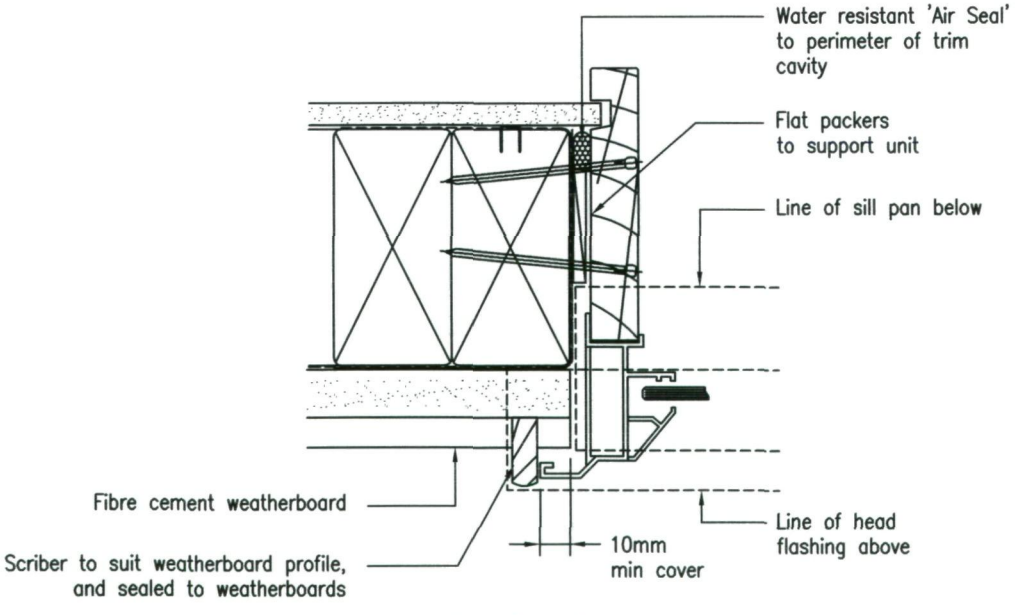

Jamb Detail

--- THIS REPORT SHALL NOT BE REPRODUCED EXCEPT IN FULL AND ONLY WITH PRIOR WRITTEN PERMISSION ---

WINDOW INSTALLATION SYSTEM © WINDOW ASSOCIATION OF NEW ZEALAND INC.
THE CONTENT OF THIS REPORT MAY CHANGE WITHOUT NOTICE