HURUNUI District Council

Address: PO Box 13, Amberley
Telephone: (03) 314 8816
Facsimile: (03) 314 9181

NM Build Ltd t/a Trident Homes Christchurch
PO Box 76178
Northwood
Christchurch 8548

Customer No BC200465
Date 30/11/20

GST Reg No 53-915-477

Tax Invoice 46779

BC200465 - Olliver - Deposit Invoice	1,500.00 *
(* Incl GST $195.65)	
Sub Total	**$1,500.00**
Total incl GST	**$1,500.00**

Council's bank account 03-0802-0946666-00

NM Build Ltd t/a Trident Homes Chri

Customer No BC200465
Date 30/11/20
Invoice No 46779
Total Due $1,500.00

GoGet Processing Summary Report

Consent No: 200465
Site Address: 4 Pukeko Way, Amberley
Description: New residential dwelling

Checklist/Elements	Status	Notes	Processed By
Vetting	Pass		Milly Perkins
Exemption	N/A		MAP
Certificate of Acceptance (Building)	N/A		MAP
Building consent/PIM	Pass		MAP
Client Checklist *	N/A		MAP
Earthquake Fast Track Queue	N/A		MAP
PIM only check	N/A		MAP
ED buildings - ODP Waiver	N/A		MAP
Deposit/Fee	Pass	Provided and checked - OK	MAP
HDC Project Payment (Lominga)	N/A		MAP
Application Form - Building Consent*	Pass	Provided and checked - OK	MAP
Building Code Assessment	Pass	Provided and checked - OK	MAP
Compliance schedule information	Pass	Provided and checked - OK	MAP
Planning Check / PIM Declaration form *	Pass	Provided and checked - OK	MAP
Certificate of Title *	Pass	Provided and checked - OK	MAP
Agent Nomination form *	Pass	Provided and checked - OK	MAP
Any relevant Resource Consents *	Pass	Sent to planning check	MAP
Design Memorandum (Form 2A)	Pass	Provided and checked - OK	MAP
Heritage Building Status - Internal Only alterations	N/A	New build	MAP
DRAWINGS/SPECS:	Pass	Provided and checked - OK	MAP
Site plan *	Pass	Provided and checked - OK	MAP
Floor plan *	Pass	Provided and checked - OK	MAP
Elevations *	Pass	Provided and checked - OK	MAP
Drainage plan*	Pass	Provided and checked - OK	MAP
Bracing Plan & Schedule/Calculations	Pass	Provided and checked - OK	MAP
Cross sections	Pass	Provided and checked - OK	MAP
Construction details	Pass	Provided and checked - OK	MAP
Risk Score (Weathertightness Matrix)	Pass	Provided and checked - OK	MAP
Building Category	Pass	Provided and checked - OK	MAP
Lighting Plan	Pass	Provided and checked - OK	MAP
Written specifications	Pass	Provided and checked - OK	MAP
Roof Truss Design & PS1	Pass	Provided and checked - OK	MAP
Producer Statements	Pass	Provided and checked - OK	MAP
Liquefaction Assessment received?	N/A	N/A - Liquefcation Zone3	MAP
Amendment to Building consent	N/A		MAP
Solid & Liquid Fuel Burner	N/A		MAP
Marquee Checklist	N/A		MAP
1 Storey Dwelling	Pass		Brenna Ogier
General	Pass		BXO
Property File Information Considered	Pass	Considered. No issues noted.	BXO
New building work	Pass	Building work has not been started - Confirmed	BXO
Building Complexity	Pass	R1 - Residential outbuilding & ancillary building; Single storey detached dwelling (SH) designed to a common standard (NZS 3604, NZS 4229) risk matrix score less than or equal to 6	BXO
PIM Information Considered	Pass	Considered. PIM complete and PIM Notes added to	BXO

Checklist/Elements	Status	Notes	Processed By
		consent.	
Service Plan Review	Pass	Sewer ok S/W to soak pit not lateral - refer sep RFI - resolved - ok	BXO
Earthquake zone	Pass	3	BXO
Altitude	Pass	0-100m	BXO
Snow zone & load	Pass	N4	BXO
Wind zone	Pass	A	BXO
Exposure zone	Pass	B/C	BXO
Ground	Pass	3 (VL) - Suitable - Good Ground as defined in NZS3604	BXO
Wind speed	Pass	Wind Zone: A Ground Roughness: Open Site Exposure: Exposed Topographic Class: T1 Wind Speed High in accordance with NZS3604	BXO
Importance level	Pass	2	BXO
Building use - Schedule 2 Building Regulation 2005	Pass	SH	BXO
Procedure for inspections included	N/A	No engineers inspections required	BXO
Building Act 2004 Sections	Pass		BXO
Sec 28 - Cases Involving Bans	Pass	N/A none identified in documents	BXO
Sec 67 - Waivers or Modifications	Pass	None requested/ required	BXO
Sec 71-74 - Building on Land Subject to Natural Hazards	Pass	Site of proposed building clear of natural hazard areas mapped on YourMaps	BXO
Sec 75 - Building on 2 or More Allotments	Pass	Proposed building work sited clear of legal boundaries and easements	BXO
Sec 102 - When compliance schedule must be issued	N/A	No specified systems	BXO
Sec 112 - Alterations to Existing Buildings	Pass	New building - no requirements	BXO
Sec 133AT - Alterations to buildings subject to EPB notice	N/A		BXO
Sec 113 - Specified Intended Life	Pass	Intended life not specified --- Response - BXO 21 Dec 2020 2:48pm --- Phone to resolve confirmed indefinite not less than 50 years - instructed me to tick box on application form	BXO
Request for Further Information:			
Request: Please confirm intended life of consent is indefinite but not less than 50 years			BXO
Response: Phone to resolve confirmed indefinite not less than 50 years - instructed me to tick box on application for			BXO
Sec 114 - Change of use	Pass	New building - no requirement	BXO
NZ Building Code Handbook	Pass		BXO
A1 Classified Use	Pass	Housing - Detached dwelling	BXO
B1 Structure	Pass		BXO
Foundations	Pass	Alternative solution based on NZS 3604:2011 Fig 13(b) or 15 (b) - in situ concrete with 2/ D16	BXO
Floor Slab and mesh	Pass	100mm 500E mesh reinforced concrete	BXO
DPM	Pass	250 micron 1 ply polyethylene sheet	BXO
Steel concrete cover	Pass	Adequate support, min 30mm to concrete top surface	BXO
Supplementary bars	Pass	Positions comply (Fig. 7.18)	BXO
Shrinkage control	Pass	Saw-cuts - positions comply (Fig 7.19)	BXO
Slab thickenings (see truss design data)	Pass	Refer to sep RFI - resolved - slab pad thickening in place where required	BXO
Piles (incl. bracing)	N/A	N/A no piles	BXO

Checklist/Elements	Status	Notes	Processed By
Bearers	N/A	N/A - no bearers	BXO
Floor joists	N/A	N/A - no joists	BXO
Load-bearing walls	Pass	Truss design note on slab thickening sheet refer to ribraft floor design, not a ribraft design on plans - please confirm and amend as required --- Response - BXO 25 Jan 2021 8:41am --- Revised truss design provided in accordance with foundation design, slab thickening on plans in correct place - ok	BXO
Request for Further Information:			
Request: B1 Structure: Truss design note on slab thickening sheet refering to ribraft floor design, not a ribraft design on plans - please confirm and amend as required			BXO
Response: Revised truss design provided in accordance with foundation design, slab thickening on plans in correct place - ok			BXO
Stud centres (ground level)	Pass	SG8 90 x 45mm @ 600mm crs	BXO
Long studs	N/A	N/A no long studs	BXO
Lintels	Pass	By truss manufacturer - see drawings and PS1	BXO
Bracing (ground level)	Pass	GIB "Ezybrace" system - using RigidRap	BXO
Brace calculations	Pass	See specification - calculations all OK	BXO
Bracing distribution	Pass	Sufficiently even bracing distribution - complies	BXO
Ceiling Diaphragms	N/A	N/a - not required	BXO
Support beams	N/A	no support beams required	BXO
Trusses	Pass	Proprietary timber trusses - refer manufacturer's details and PS1	BXO
Trusses - Truss point loads	Pass	Refer truss manuf. details and PS1 for specific design	BXO
Trusses - Truss fixings	Pass	Proprietary manufacturer's fixings - see dwgs and PS1	BXO
Timber rafters	N/A	N/A - no rafters in design	BXO
Rafter fixings	N/A	N/A - no rafters in design	BXO
Purlins/tile battens	Pass	SG8 70 x 45mm on flat @ 900mm crs less than or equal to 900mm span	BXO
Purlin/batten fixings	Pass	1/10g self-drilling screw, min 80mm long	BXO
Roof bracing	Pass	Refer below gable bracing Light roof, 5 braces required, 10 valley and hips - ok	BXO
Gable braces	Pass	SG8 90 x 45mm 1.85m max length (complies Fig 10.23)	BXO
Ceiling battens/restraints	Pass	Proprietary metal ceiling batten system to manuf. requirments	BXO
Entry columns/beams	N/A	No entry columns in design	BXO
Verandah Posts	N/A	No verandah in design	BXO
Footing sizes (uplift)	N/A	No verandah in design	BXO
Verandah beams	N/A	No verandah in design	BXO
Timber rafters	N/A	No verandah in design	BXO
Deck piles	N/A	No deck included in consent	BXO
Deck Bearers	N/A	No deck included in consent	BXO
Deck joists	N/A	No deck included in consent	BXO
Decking	N/A	No deck included in consent	BXO
Retaining walls	N/A	No retaining walls	BXO
Siting/surcharge	N/A	No retaining walls	BXO
Footings and construction	N/A	No retaining walls	BXO
Solid fuel heater compliance	N/A	Future fire only - not included in this consent	BXO
Non Clean-Air-approved burner model	N/A	Future fire only - not included in this consent	BXO
Clean-air approved burner model	N/A	Future fire only - not included in this consent	BXO
Clean air approved number	N/A	Future fire only - not included in this consent	BXO

Checklist/Elements	Status	Notes	Processed By
Hearth/Slab	N/A	Future fire only - not included in this consent	BXO
Chimney/flue	N/A	Future fire only - not included in this consent	BXO
Fire/Flue Durability applications	N/A	Future fire only - not included in this consent	BXO
B2 Durability	Pass		BXO
Fixings	Pass	Quality materials from reputable manufacturers	BXO
Durability evaluation	Pass	Quality materials from reputable manufacturers	BXO
Durability; materials suitable for application	Pass	Durability of materials specified NOT suitable for proposed applications	BXO
Timber treatments - In ground	N/A	no timber in ground	BXO
Timber treatments - Sub-floor	N/A	no timber subfloor	BXO
Timber treatments - Floor	N/A	no timber floor	BXO
Timber treatments - Ext. trims	Pass	H3.1	BXO
Timber treatments - Cavities	Pass	H3.1	BXO
Timber treatments - Plywood	N/A	no plywood	BXO
Timber treatments - Interior wall framing	Pass	H1.2	BXO
Timber treatments - Exterior wall framing	Pass	H1.2	BXO
Timber treatments - Roof framing	Pass	H1.2	BXO
Timber treatments - Exterior deck piling	N/A	no deck	BXO
Timber treatments - Exterior deck framing	N/A	no deck	BXO
C1 - C6 Protection from Fire	Pass		BXO
Solid Fuel heater (heat transfer)	N/A	No fire included in this consent	BXO
Woodburner make and model	N/A	No fire included in this consent	BXO
Risk group assessed	Pass	SH	BXO
Fire protection system	Pass	Type 1 - Domestic smoke alarms only	BXO
Escape path lengths	Pass	Match protection system - yes	BXO
Distance to boundary (1m min)	Pass	Distance to boundary greater than 1m	BXO
Life/Property rating system	Pass	Distance to boundary greater than 1m	BXO
D1 Access Routes	Pass		BXO
Slip resistance to external access	Pass	Please confirm surface of entry patio/path is in accordance with D1 AS1 Table 2 in regards to slip resistance --- Response - BXO 21 Dec 2020 3:37pm --- Phone to resolve confirmed broom finished concrete - refer exterior works specifications, included in 80sqm	BXO
Request for Further Information:			
Request: D1 Acess Routes Please confirm surface of entry patio/path is in accordance with D1 AS1 Table 2 in regards to slip resistance.			BXO
Response: Phone to resolve confirmed broom finished concrete - refer exterior works specifications, included in 80sqm			BXO
Stair	N/A		BXO
Tread and risers	N/A		BXO
Handrails	N/A		BXO
D2 Mechanical Access	N/A	No work detailed in this proposal requiring consideration under this code clause	BXO
E1 Surface Water	Pass		BXO
Acceptable Solution Suitable	Pass	Does the site have a history of flooding? No Is the site adjacent to a watercourse? No Is the site in a low lying area? No Is the site located in a secondary flow path? No	BXO
Protection from flooding	Pass	Using elevations on YourMaps and contours confirmed adequate contours to direct surface water away - ok	BXO
Minimum FFLs	Pass	FFL not shown on plans in relation to crown of road	BXO

		in accordance with E1/AS1 --- Response - BXO 25 Jan 2021 8:35am --- Crown of road height indicated on plans FFL more than 150mm above - note added to plans for clarification as note ambiguous	
Request for Further Information:			
Request: E1 Surface Water FFL not shown on plans in relation to crown of road in accordance with E1/AS1			BXO
Response: Crown of road height indicated on plans FFL more than 150mm above - note added to plans for clarification as note ambiguous			BXO
Gutters	Pass	--- Response - BXO 21 Dec 2020 2:52pm --- Confirmed using Stratco profile, profile exceeds minimum cross sectional area - ok	BXO
Request for Further Information:			
Request: E1 Surface Water Concept fascia, quad gutter - Stratco profile? cross sectional area confirmation required			BXO
Response: Confirmed using Stratco profile, profile exceeds minimum cross sectional area - ok			BXO
Down pipes	Pass	Standard downpipes - comply with E1, Table 5	BXO
Discharge pipe size	Pass	100mm diameter - refer site plan	BXO
Pipe gradients: mains	Pass	1:120 minimum - refer site plan	BXO
Soak pit/other	Pass	Soak pit for hardstand via pretreatment or sump and from house 2% AEP 24hr event Soak pit detail to be added to plans. Soak pit to be sized (percolation test to be carried out) --- Response - BXO 25 Jan 2021 8:30am --- Soak pit sized based on report from neighbouring property, soakage test to be completed on site to confirm min 400mm/hr soakage. Sized to cater for 2% AEP - ok	BXO
Request for Further Information:			
Request: RM Compliance item and E1 Surface Water Soak pit for hardstand via pretreatment or sump and from house 2% AEP 24hr event Soak pit detail to be added to plans. Soak pit to be sized (percolation test to be carried out) STORMWATER: as per the consent notice registered against the record of title lot 25 shall comply with Council's global stormwater discharge consent (ECan ref CRC082988) and the following shall apply: (b) For on-site soak pits, the following shall apply: - An investigation shall be carried out at each soak pit location to determine the soakage rate and water table depth; - Soak pits shall be designed to cater for runoff from up to and including the 24 hour 10% AEP rainfall event, with allowance made for overflow from up to and including the 24 hour 2% AEP rainfall event; - For soak pits dealing with roof and/or non-trafficable hardstand areas, roofs shall not be zinc-coated (galvanised), and systems shall be sealed to prevent entry of contaminants; - For soak pits dealing with trafficable hardstand areas, soak pit base levels shall be at least 1 metre above the water table, and pre-treatment shall be provided (e.g. vegetated swales and/or submerged outlet sumps).			BXO
Response: Soak pit sized based on report from neighbouring property, soakage test to be completed on site to confirm min 400mm/hr soakage. Sized to cater for 2% AEP - ok			BXO
Retaining wall drainage	N/A	No retaining walls	BXO
E2 External Moisture	Pass		BXO

Checklist/Elements	Status	Notes	Processed By
Floors	Pass	Cladding clearances to ground.	BXO
Weathertightness risk factors	Pass	See Risk Matrix calcs - all complies	BXO
Building Wrap type / Sill tape	Pass	IBS RigidRAP - codemark CM70035	BXO
Cladding systems	Pass	Hardies "Linea" board - fixed on cavity	BXO
Brick tie spacings - SED	N/A	No brick	BXO
Cladding on frame - bare GL	N/A		BXO
Clad on frame - paved GL	N/A		BXO
Cav. veneer clad - bare GL	Pass	Greater than or equal to 150 and <225mm	BXO
Cav. Veneer clad - paved GL	Pass	Greater than or equal to 100 and <150mm	BXO
Flashings	Pass	Custom designed flashings - Comply with E2 Table 7	BXO
Roofing systems	Pass	Longrun coated metal - corrugated	BXO
Roof pitch	Pass	25°	BXO
Roofing underlay type	Pass	Thermakraft 215 bituminous self supporting	BXO
E3 Internal Moisture	Pass		BXO
Surface finishes	Pass	Aqualine to wet areas, std Gib to other areas, 3 coat paint system, tiled splash backs to vanities and bath - refer drawings and spec for full details	BXO
Fungal growth prevention	Pass	Appropriate surfaces/finishes installed/applied	BXO
Wet area shower	Pass	Proprietary shower cubicle - refer spec for manuf. Data	BXO
F1 Hazardous Agents	N/A	N/A - Land use map checked for HAIL - OK	BXO
F2 Hazardous Building Materials	Pass		BXO
Hazardous building materials	Pass	Glazing only to consider; issues addressed OK	BXO
F3 Hazardous Substances	N/A	No work detailed in this proposal requiring consideration under this code clause	BXO
F4 Safety from Falling	Pass		BXO
Opening windows	Pass	FFL - GL <1m - protection not required	BXO
Barriers	N/A	Not required	BXO
F5 Construction Hazards	Pass		BXO
F5 Construction Hazards	Pass	Protection provided - refer specifications (internal boundary fencing prior to construction and temp security in accordance with F5 to front)	BXO
F6 Visibility in Escape Routes	N/A	No work detailed in this proposal requiring consideration under this code clause	BXO
F7 Warning Systems	Pass		BXO
Locations	Pass	3m max from all bedroom doors - OK	BXO
F9 Means of restricting access to residential pools	N/A	No work detailed in this proposal requiring consideration under this code clause	BXO
G1 Personal Hygiene	Pass		BXO
No. of sanitary fixtures	Pass	2no. Shower 2no. WC 2no. vanity 1 no. bath Adequate fixtures for 3no. bed dwelling	BXO
Basin in WC space	Pass	No - wash basin in immediate adjacent room	BXO
G2 Laundering	Pass		BXO
Laundering facilities	Pass	Wash tub; washing machine connection provided	BXO
G3 Food Prep and Prevention of Contamination	Pass		BXO
Appliances and Facilities	Pass	See Drawings - OK Prep sink: Yes Cooktop: Yes Storage: Yes	BXO

Checklist/Elements	Status	Notes	Processed By
		Refrigerator: Yes	
G4 Ventilation	Pass		BXO
Ventilation	Pass	Natural openings + extract to Bathrooms and Kitchen	BXO
Ventilation rate	Pass	Natural - min. 5% of floor area opening windows	BXO
G6 Airborne and Impact Sound	N/A	No work detailed in this proposal requiring consideration under this code clause	BXO
G7 Natural Light	Pass		BXO
Vertical windows in external walls	Pass	Greater than or equal to 10% of floor area for window area to all habitable spaces	BXO
Outside environment awareness	Pass	Sufficient natural light levels and outside env. awareness	BXO
G8 Artificial Light	Pass		BXO
Illuminance	Pass	Illuminance at floor level will meet 20 lux minimum	BXO
G9 Electricity	Pass		BXO
Electrical installation	Pass	Refer dwgs for fitting locations and spec for details	BXO
G10 Piped Services	N/A	No work detailed in this proposal requiring consideration under this code clause	BXO
G11 Gas as an Energy Source	Pass		BXO
Safe pressure maintenance suitability	Pass	Rinnai VT26L Gas hot water system - specs provided, bottles located on plans comply position. Reputable system constructed for maintenance of safe workng pressures - OK	BXO
Auto cut-off system (vent. space)	Pass	Auto cut-off in place as required for appliance in ventilated space - OK	BXO
Isolation valves	Pass	All systems suitably fitted with isolation valves necessary - OK	BXO
G12 Water Supply	Pass		BXO
Water supply - source	Pass	Connected to Local Authority supply	BXO
Water supply - quantity	Pass	Adequate council supply - OK	BXO
Water supply - quality	Pass	Adequate council supply quality - OK	BXO
Safe tray installed	N/A	N/A - no cylinder	BXO
HW Tempering	Pass	Output max 55°C	BXO
Seismic restraints/ tank supports	N/A	N/A - no cylinder	BXO
Drain/relief vent material	N/A	N/A - no cylinder	BXO
Solar heating system	N/A	No solar in this consent	BXO
Solar support/fixing	N/A	No solar in this consent	BXO
G13 Foul Water	Pass		BXO
Effluent disposal system (EDS)	Pass	Connected to local authority services	BXO
ECAN rule 5.8	N/A		BXO
Bedroom numbers	N/A		BXO
EDS tank size	N/A		BXO
EDS daily flow	N/A		BXO
Gully traps	Pass	4 total	BXO
Support and thermal movement	Pass	Adequate support and thermal movement allowed for - OK	BXO
Discharge pipe size	Pass	100mm diameter	BXO
Drain ventilation	Pass	80mm TV/MV at head of drain	BXO
Pipe/joint materials	Pass	PVC	BXO
Pipe gradients: mains	Pass	1:120 minimum	BXO
Pipe gradients: fittings	Pass	40mm@1:40	BXO
Sanitary plumbing	Pass	Refer fitting layout on designer's drawings	BXO
Bedding and backfill	Pass	Bedded in adequate fill, to Fig. 7 - OK	BXO
Drains under buildings	N/A	N/A - no drains under buildings	BXO

Checklist/Elements	Status	Notes	Processed By
Inspection chamber (see PIM notes)	Pass	Boundary kit already installed by council - ok Manufacture specifications for heavy duty E/One submersible grinder pump in an underground polyethylene tank, or similar system as approved by Hurunui District Council --- Response - BXO 25 Jan 2021 8:32am --- Ecoflow E/one specifications and installation instructions provided - ok	BXO
Request for Further Information:			
Request: RM Compliance item: Manufacture specifications for heavy duty E/One submersible grinder pump in an underground polyethylene tank, or similar system as approved by Hurunui District Council			BXO
Response: Ecoflow E/one specifications and installation instructions provided - ok			BXO
H1 Energy Efficiency	Pass		BXO
Means of Compliance	Pass	Schedule method	BXO
Thermal Envelope	Pass	Floor: Concrete R1.3 Wall: R2.8 Pink Batts Ceiling: R4.0 Pink Batts Pink Batt manufactures specifications and installation instructions to be provided --- Response - BXO 21 Dec 2020 2:52pm --- Phone to resolve instructed me to add installation instructions to tech data - o k	BXO
Request for Further Information:			
Request: H1 Energy Efficiency Pink Batt manufactures specifications and installation instructions to be provided			BXO
Response: Phone to resolve instructed me to add installation instructions to tech data - o k			BXO
Hot water system	Pass	HWC and pipework suitably insulated	BXO
Changes made during processing	Pass		BXO
Changes to External Envelope	Pass	None made during processing	BXO
Changes to Plans and Specifications	N/A		BXO
Minor Variations during processing	Pass	None made during processing	BXO
Producer Statement Assessment 1	Pass		Brenna Ogier
Producer statement category	Pass		BXO
Category	Pass	Design (PS1) - Intended for use by the person responsible for the design in circumstances where the Building Consent Authority will rely on the producer statement to issue a building consent.	BXO
Producer statement content	Pass		BXO
Heading	Pass	Headed with Producer Statement	BXO
Address details	Pass	Generic MiTek Truss Design Producer Statement - OK	BXO
Author details	Pass	Mitek truss design input is correct	BXO
Written statement	Pass	That clearly identifies the building consent work covered by the Producer Statement	BXO
Date	Pass	Date the PS1 was produced 20/12/20	BXO
Professional indemnity insurance	Pass	The sum of Professional Indemnity Insurance held is identifiedThe sum of Professional Indemnity Insurance held is identified $500k	BXO
Decisions and outcome	Pass		BXO
Acceptance	Pass	I have accepted this Producer Statement because the documentation is COMPLETE	BXO
Validation BC Checklist	Pass		Mark Milnes
Validation	Pass		MSM

Checklist/Elements	Status	Notes	Processed By
Validation	Pass	Restricted Building work: Y Purpose Group: SH Complexity confirmed: R1	MSM
Review of PIM requirements	Pass	PIM complete and PIM notes added to Magiq	MSM
Resource consent required	Pass	Resource consent required for breach of Hurunui District Plan rule 4.6.10 Building length.	MSM
Review of processing correspondence	Pass	All relevant code clauses considered by processing officer All RFI items signed off	MSM
Processing decisions justified	Pass	Processing decisions reviewed	MSM
Alternative solutions reviewed	Pass	Alternative solutions reviewed : 2D16 as alternative to 2 D12	MSM
Client copy correct	Pass	Approved documents stamped and added to folder	MSM
Environment risk assessment	Pass	Site factors added to PIM notes Site factors considered by processor	MSM
Design and environment risk assessment	Pass	Site hazards considered - natural , HAIL CT checked for easements, clearance to boundaries	MSM
Construction risk assessment	Pass	Structural risks: NZS3604:2011 Weather tightness detailing: E2/AS1 Fire Safety: Type 1 alarm system	MSM
Inspection	Pass	Inspections loaded to consent record	MSM
Annotations made permanent	Pass		MSM
Timesheet completed	Pass	Fixed Fee - confirmed on working file	MSM
Naming conventions	Pass	Naming conventions correct	MSM
consent approved for issue/satisfied on reasonable grounds that the Building Code will be met - S49	Pass	Required Items letter saved to Approvals folder as pdf Conditions added to Magiq	MSM

I am satisfied on reasonable grounds that the provisions of the Building Code will be met if the building work in relation to the attached application is properly completed in accordance with the attached plans and specifications.

Signed: _____ Date: 26 January 2021 9:43 am

Mark Milnes

HURUNUI DISTRICT COUNCIL
P.O. Box 13 | Amberley | 7441 | 66 Carters Road | Amberley | 7410
Phone 03 314-8816 | Fax 03 314-9181 | Email info@hurunui.govt.nz
Web hurunui.govt.nz | facebook.com/HurunuiDistrictCouncil
Skype hdc_customer_services | twitter.com/hurunuidc

21 December 2020

NM Build Ltd t/a Trident Homes Christchurch
PO Box 76178
Northwood
Christchurch 8548

Dear Pete

Request for Information – Building Consent No 200465
Proposal: New residential dwelling
Site Address: 4 Pukeko Way, Amberley

The above application has been checked. However, the proposal must comply with the requirements of the New Zealand Building Code before Consent can be granted.

Therefore for a building consent to be granted we require the following further information:

BUILDING

1. RM Compliance item and E1 Surface Water

   Soak pit for hardstand via pre-treatment or sump and from house 2% AEP 24hr event. Soak pit detail to be added to plans. Soak pit to be sized (percolation test to be carried out). I have confirmed that the stormwater can not discharge into the swale.

   Snips from consent notice below for further clarification;

   STORMWATER: as per the consent notice registered against the record of title lot 25 shall comply with Council`s global stormwater discharge consent (ECan ref CRC082988) and the following shall apply: (b) For on-site soak pits, the following shall apply: - An investigation shall be carried out at each soak pit location to determine the soakage rate and water table depth; - Soak pits shall be designed to cater for runoff from up to and including the 24 hour 10% AEP rainfall event, with allowance made for overflow from up to an including the 24 hour 2% AEP rainfall event; - For soak pits dealing with roof and/or non-trafficable hardstand areas, roofs shall not be zinc-coated (galvanised), and systems shall be sealed to prevent entry of contaminants; - For soak pits dealing with trafficable hardstand areas, soak pit base levels shall be at least 1 metre above the water table, and pre-treatment shall be provided (e.g. vegetated swales and/or submerged outlet sumps).

2. RM Compliance item:

   Manufacture specifications for heavy duty E/One submersible grinder pump in an underground polyethylene tank, or similar system as approved by Hurunui District Council

3. E1 Surface Water

   FFL not shown on plans in relation to crown of road in accordance with E1/AS1

4. B1 Structure:

Truss design note on slab thickening sheet refering to ribraft floor design, not a ribraft design on plans - please confirm and amend as required

5. ~~D1 Acess Routes~~

~~Please confirm surface of entry patio/path is in accordance with D1 AS1 Table 2 in regards to slip resistance.~~ #5 Resolved - o k

Your application will be placed on hold until this information is provided. When the above requirements have been addressed appropriately, Council officers will again consider approval of your application.

Please note that all information must be supplied within 28 days of this letter or the application will be refused.

If you have any queries, please contact me.

Yours faithfully

Brenna Ogier
Building Officer

	Building Consent / PIM Check Sheet (T-02-PS-01)	Ref : T-02-PS-01 Version: 13 Issued: 6 July 2017

Check Sheet – Documents required before Application can be formally received	**Applicant**	**Council**
Deposit supplied *(See current "Fees & Charges" list for required amount)* *HDC A/C # for direct online payment :* **03-0802-0946666-00**		
Building Consent Application - Form 2 *(signed and correctly / fully completed)*		
Planning check/PIM declaration form *(required for all new building work)*		
Certificate of Title *(relevant to property & no more than 6 months old)*		
Agent Nomination form *(required if applicant is not the property owner)*		
Any relevant Resource Consents *(copy of decision letter / info)*		
Design Memorandum – Form 2A *(if project involves Restricted Building Work)*		
Project details / drawings required (to scale) :		
Site plan *(showing boundaries, site coverage, distances)*		
Floor plan		
Elevations		
Cross sections *(through main construction areas requiring detail)*		
Construction details *(including weather tightness details)*		
Drainage Plan		
Bracing Plan & Schedule / Calculations		
Weathertightness Risk Matrix		
Written specifications		
Roof truss design and Producer Statement		
Other Producer Statements *(appropriate to site & drawings produced, by suitably qualified person)*		
Liquefaction Assessment *(required for Zones 1 & 2 - see report on HDC website)*		
Compliance Schedule information *(draft compliance schedule, for commercial applications)*		

Approved consent documentation will be available to download from our website. Printed copies will only be sent upon request and will incur printing and postage charges.

For Building Consent Authority Use Only:

This application is *as all relevant information* *been supplied*

Signed :

Name :

Date :

Notes :

KEY: √ = Receive X = Missing or inaccurate NA = Not Applicable

HURUNUI DISTRICT COUNCIL
P.O. Box 13 | Amberley | 7441 | 66 Carters Road | Amberley | 7410
Phone 03 314-8816 | Fax 03 314-9181 | Email info@hurunui.govt.nz
Web hurunui.govt.nz | facebook.com/HurunuiDistrictCouncil
Skype hdc_customer_services | twitter.com/hurunuidc

Form 5

Building Consent 200465

Section 51, Building Act 2004

The building

Street address of building: 4 Pukeko Way, Amberley

Legal description of land where building is located: LOT 25 DP 488914

Building Name:

Location of building within site/block number:

Level/unit number:

The owner

Name of owner: Steven & Wendy Olliver

Contact person: Wendy

Mailing address: 19 South Crescent, RD 1, Amberley 7481

Street address/registered office:

Phone number:	Daytime:	Mobile: 0279454377
Landline:	Fax number:	
Email: wendyolliver62@yahoo.com.au	Website:	

First point of contact for communications with the council/building consent authority:

Full Name: NM Build Ltd t/a Trident Homes Christchurch

Mailing Address: PO Box 76178, Northwood, Christchurch 8548

Phones: 0274888201, 033759020

Email: pnisbet@tridenthomes.nz

Building work

The following building work is authorised by this building consent:

Project: New residential dwelling

Current, lawfully established, use: Detached Dwelling

This building consent is issued under section 51 of the Building Act 2004. This building consent does not relieve the owner of the building (or proposed building) of any duty or responsibility under any other Act relating to or affecting the building (or proposed building).

This building consent also does not permit the construction, alteration, demolition, or removal of the building (or proposed building) if that construction, alteration, demolition, or removal would be in breach of any other Act.

CONDITIONS OF BUILDING CONSENT

Section 90 – Inspections by building consent authorities

This building consent is issued subjected to the condition that agents authorised by the BCA for the purposes of this section are entitled, at all times during normal working hours or while building work is being done, to inspect –

a) Land on which building work is being or is proposed to be carried out; and
b) Building work that has been or it being carried out on or off the building site; and
c) Any building

BUILDING CONSENT ADVICE NOTES

This building consent is issued subject to the following conditions:

1. A minimum of 24 hrs notice must be given to the Building Officer prior to any inspections.
2. Construction, fixings and materials are to be in accordance with the approved consent documents authorised under the Building Act 2004,any variance may require an application for an amendment
3. It is recommended that a copy of the approved plans and specifications are kept on site at all times for building contractors
4. Under section 52 of the Building Act 2004 a building consent will lapse in 12 months from date of issue if the building works concerned have not been commenced
5. NO BUILDING WORK CAN COMMENCE UNTIL A RESOURCE CONSENT IS GRANTED.

Compliance schedule

A compliance schedule is not required for the building.

Attachments

Copies of the following documents are attached to this building consent:

- Project information memorandum 200465
- Certificate attached to project information memorandum
- Required Items Letter ***(refer to this for inspection and CCC documentation requirements)***

Signature: Position: Building Administration Officer

On behalf of: Hurunui District Council

Date: 26/01/21

HURUNUI DISTRICT COUNCIL
P.O. Box 13 | Amberley | 7441 | 66 Carters Road | Amberley | 7410
Phone 03 314-8816 | Fax 03 314-9181 | Email info@hurunui.govt.nz
Web hurunui.govt.nz | facebook.com/HurunuiDistrictCouncil
Skype hdc_customer_services | twitter.com/hurunuidc

FORM 6
CODE COMPLIANCE CERTIFICATE APPLICATION
Section 92, Building Act 2004

APPLICATION

Building Consent No : **BC200465** Consent issued by Hurunui District Council

THE OWNER		AGENT – APPLICANT N/A ☐ *(leave section blank)*	
Owner's Name :	Steven and Wendy Olliver	Agent's Name :	NM Build Ltd t/a Trident Homes Christchurch North
Contact Person : (if owner is not an individual)	Steven Olliver	Contact Person :	Peter Nisbet
Mailing Address :	19 South Crescent Amberley	Mailing or Billing Address :	PO Box 76-178 Northwood Christchurch
Postcode :	7410	Postcode :	8548
Street Address or Registered Office :		Street Address or Registered Office :	756 Main North Road Belfast Christchurch
Postcode :		Postcode :	8548
Mobile Phone :	027 236 4922	Mobile Phone :	0274 888 201
Phone :		Phone :	03 375 9020
After Hours Phone :		After Hours Phone :	
Landline number :		Landline number :	
Daytime phone :		Daytime phone :	
Fax number :		Fax number :	
E-mail Address :	wendyolliver62@yahoo.com.au	E-mail Address :	pnisbet@tridenthomes.nz
Website :		Website :	www.tridenthomes.nz

Note – The Agent (if appointed) will be the first point of contact for communications with the Council / Building Consent Authority regarding this application / building work and will receive all correspondence including all invoices

The Code Compliance certificate should be sent to : ☐ Owner ☑ Agent

All building work carried out under the above Building Consent was completed on - Date : 2/8/2021

The following evidence of ownership is attached to this application : ☑ Certificate of Title
☐ Sale and Purchase Agreement (only if new purchase)

SIGNATURE

I request that the Hurunui District Council Building Consent Authority issue a Code Compliance Certificate for this work (under section 95 of the Building Act 2004)

Signature of owner / or agent on behalf of and with the authority of the owner : Peter Nisbet

☐ Owner ☑ Agent Date : 2/8/2021

Note : If acting "for and on behalf", please read the following declaration before signing :

"I hereby declare that I am authorised to act as Agent of the Owner"

THE PERSONNEL WHO CARRIED OUT WORK OTHER THAN RESTRICTED BUILDING WORK	
Name of Builder : Camel Construction	Phone Number : 021 749 374
Postal Address : 78 Cainbrea Drive, Christchurch	Registration Number : 104038
E-mail Address : tim@camelconstruction.co.nz	
Name of Craftsman Plumber : Signature Plumbing Ltd	Phone Number : 027 451 4436
Postal Address : 143 Mandeville Road, RD2, Kaiapoi	Registration Number : 16161
E-mail Address : signatureplumbing@xtra.co.nz	
Name of Craftsman Gasfitter : The Gas Guys	Phone Number : 03 310 6810
Postal Address : 386 High Street, Rangiora	Registration Number : 27836
E-Mail Address : admin@gasguys.co.nz	
Name of Registered Drain-layer : Pipe Rite Drainage	Phone Number : 021 229 3015
Postal Address : 83 Youngs Road, RD1, Rangiora	Registration Number : 17121
E-mail Address : office@piperite.co.nz	
Name of Electrician : Ezibreeze Ltd	Phone Number : 03 313 5966
Postal Address : PO Box 705, Rangiora	Registration Number : 267187
E-mail Address : sharon@ezibreeze.co.nz	
Name of soild / liquid fuel burner installer :	Phone Number :
Postal Address :	Registration Number :
E-mail Address :	
Name of other Contractor / Tradesperson :	Phone Number :
Postal Address :	Registration Number :
E-mail Address :	
Add any additional persons on another (separate) sheet.	

ATTACHMENTS

The following supporting documents are attached to this application :

- ☑ Certificates / other documents from the personnel who carried out the work
- ☑ Certificates that relate to the energy work
- ☑ Evidence that Specified Systems are capable of performing to the performance standards set out in the building consent
- ☑ Memoranda from Licensed Building Practitioner(s) stating what Restricted Building Work they carried out or supervised

Notes by applicant: (Other notes or comments which you as the applicant may wish to add)

RESTRICTED BUILDING WORK

Did the Building Consent work include any restricted building work ☑ Yes ☐ No

If yes, provide the following details of all licensed building practitioners who were involved in the carrying out or supervising the restricted building work

Licensing Class	Name and address	Licensed building practitioner number (or registration number treated as being licensed under section 291 of the building Act 2004)	Description of particular work carried out or supervised
Foundations	Concrete Contractors Ltd	136522	
Carpentry	Camel Construction	104038	
Exterior Plasterer	Service Plus Install	BP132938	
Brick-layer			
Block-layer			
Roofer	Stratco	101500	

SPECIFIED SYSTEMS

Are there specified systems associate with this project? ☐ Yes (as listed below) ☑ No

The following specified systems are contained on the compliance schedule for the building and, in the opinion of the personnel who installed them, are capable of performing to the performance standards set out in the building consent.

SS1 Automatic systems for fire suppression
SS2 Emergency warning systems
SS3/1 Automatic doors
SS3/2 Access controlled doors
SS3/3 Interfaced fire or smoke doors and / or w indows
SS4 Emergency lighting systems
SS5 Escape route pressurisation systems
SS6 Riser Mains
SS7 Automatic back flow preventers
SS8/1 Passenger carrying lifts
SS8/2 Service lifts
SS8/3 Escalator and moving walks
SS9 Mechanical ventilation or air conditioning systems
SS10 Building maintenance units
SS11 Laboratory fume cupboards
SS12/1 Audio loops
SS12/2 FM radio and infrared beam transmission systems
SS13/1 Mechanical smoke control
SS13/2 Natural smoke control
SS13/3 Smoke curtains
SS14/1 Emergency power systems
SS14/2 Sign44s for SS1-13
SS15/1 Spoken information intended to facilitate evacuation
SS15/2 Final exits
SS15/3 Fire separations
SS15/4Signs for facilitating evacuation
SS15/5 Smoke separations
SS16 Cable cars

Additional Information to Note

1. A final inspection must have been completed prior to this application being sought.
2. The Code Compliance Certificate will be based on the approved building consent documents, so any variations to the original approved plans are required to be documented and approved prior to the work being carried out.
3. A Code Compliance Certificate will not be issued until all of the information required on this form that is relevant to the job is provided to the Council. This includes all names, certificates from personnel who carried out the work, registration numbers, producer statements, or any other required documents

PIPE
DRAINAGE LTD
D.WILLIAMS
REGO NO.18538

#1414

082073

DATE- 14/4/21
ADDRESS 4 Pukeko Way Amberley.
BCN# 2004654
GRADES- sewer 1:100, stormwater 1:90-1:100

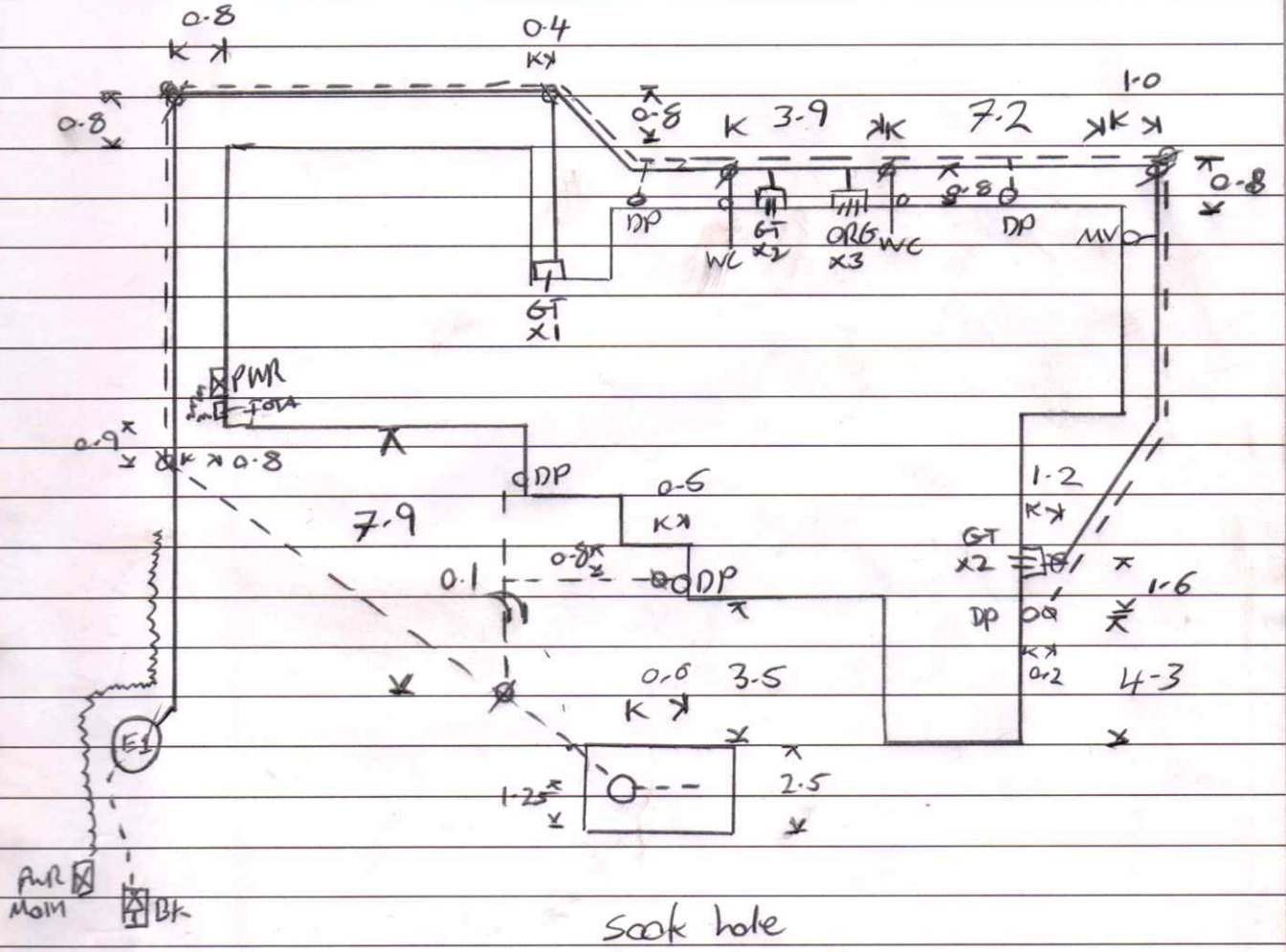

Soak hole
2.5w, 3.0L
2.0 Deep

MiTek New Zealand Limited

Correspondence from : **AUCKLAND**
40 Neales Road, East Tamaki 2013
PO Box 58-014, Botany 2163
Phone: 09 274 7109
Fax: 09 274 7100

CHRISTCHURCH
14 Pilkington Way, Wigram 8042
PO Box 8387, Riccarton 8440
Phone: 03 348 8691
Fax: 03 348 0314

www.miteknz.co.nz

PRODUCER STATEMENT for MiTek 20/20® TRUSS DESIGN - Version 4.7

ISSUED BY: **MiTek New Zealand Limited**

TO: **PlaceMakers - Frame & Truss**

IN RESPECT OF: **MiTek® Truss Designs**

This producer statement covers the MiTek 20/20® truss design and the structural performance of the GANG-NAIL® connector plate for the job reference **198239** and may be used by a Building Consent Authority to assist in determining compliance with the New Zealand Building Code.

The MiTek 20/20® truss design program has been developed by MiTek New Zealand Limited for the design of MiTek® timber roof, floor and attic trusses in New Zealand. The truss designs computed by MiTek 20/20 ® are prepared using sound and widely accepted engineering principles, and in accordance with compliance documents of the New Zealand Building Code and Verification Method B1/VM1; and internationally accepted standard ANSI/TPI 1 - 2002 as an alternative solution, to satisfy the requirements of Clause B1 of the New Zealand Building Code.

On behalf of MiTek New Zealand Limited, and subject to:

i) All proprietary products meeting their performance specification requirements
ii) The provision of adequate roof bracing and overall building stability
iii) Correct selection and placement of GANG-NAIL connector plates
iv) Correct input of Truss Design Data as shown in the Fabricator Design Statement for this job
v) The design being undertaken by the accredited fabricator under the terms of the software licence
vi) Timber is graded to the requirements of NZS 3603:1993
vii) Minimum timber treatment for these MiTek® trusses shall be in accordance with B2/AS1 Table 1A and the relevant sections of NZS 3602:2003

I believe on reasonable grounds that the trusses, if constructed in accordance with the MiTek 20/20® truss design and shop drawings, will comply with the relevant provisions of the New Zealand Building Code.

MiTek New Zealand Limited holds a current policy of Professional Indemnity Insurance no less than $500,000.

On behalf of MiTek New Zealand Limited, **Date: Thursday, 8 April 2021**

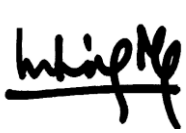

In Ling Ng, BE (Hons), CPEng, IntPE, MIPENZ (ID: 146585)
TECHNICAL SERVICES MANAGER, MiTek New Zealand Limited

Job: 198239
Client: PlaceMakers Christchurch - Hub
Phone:
Site: Trident Homes North
Olliver Residence
4 Pukeko Way
Amberley
Phone:
Description:
Building Consent No.: BC200465A

MITEK FABRICATOR DESIGN STATEMENT

This statement is issued by MiTek accredited fabricator **PlaceMakers - Frame & Truss**, being licensed to use the MiTek 20/20® software, to the client listed above and may be used by the Building Consent Authority to assist in determining compliance with the New Zealand Building Code.

MiTek 20/20® TRUSS DESIGN DATA

The MiTek 20/20® computer design for this job is based on the following design parameters entered into the program. The Fabricator shall ensure that these job details are current and relevant to the project for the design of the MiTek ® trusses.

Job Details

Importance Level : 2

Design Working Life : 50 years

Roof Truss

Timber Group:	CTF Pine	Pitch:	25.000 deg	Nominal Overhang:	600 mm
Roof		**Ceiling**		**Wind**	
Material:	Galv Iron .5mm	Material:	Metal battens fixed to BC	Area:	High (44.0 m/s)
Dead Load:	0.210 kPa	Dead Load:	0.200 kPa	Pressure Coeff:	Cpe = varies; Cpi = -0.30, 0.20
Restraints:	900 mm centres	Restraints:	600 mm centres	**Snow**	
Live Load:	Qur = 0.250 kPa Qc = 1.100 kN	Live Load:	Qc = 1.400 kN	Location:	Amberley (N4) at 100 m
				Open Ground Load:	0.900 kPa
				Basic Roof Load:	0.441 kPa

The minimum timber treatment for these MiTek® trusses shall be in accordance with B2/AS1 Table 1A and the relevant sections of NZS 3602:2003. The timber for these MiTek® trusses shall be graded to the requirements of NZS 3603:1993. Proprietary fixings and timber connectors shall be selected in accordance with NZS3604:2011 Section 4 - Durability.

MiTek® Truss List

Legend: * = detail only, ? = input only, ~~Txx~~ = failed design, Ø = non certified, Unmarked trusses = designed successfully, LB = lateral bracing required
GB = gable brace required

Truss	Qty	Span (mm)	Pitch (deg)	Spacing (mm)	Truss	Qty	Span (mm)	Pitch (deg)	Spacing (mm)	Truss	Qty	Span (mm)	Pitch (deg)	Spacing (mm)
T16	2	5693	25.000	900	T13	1	3702	25.000	900	J10	1	1902	25.000	900
T18	1	5693	25.000	630	T14	1	3702	25.000	649	J12	1	1902	25.000	900
T18A	1	5693	25.000	630	T14A	1	3702	25.000	649	V07	1	1813	25.000	900
TG03	1	9350	25.000	900	T01	2	4270	25.000	900	*R14	1	1763	25.000	900
T10	1	9250	25.000	900	T01A	1	4270	25.000	900	*R15	1	1746	25.000	900
TG02	1	9250	25.000	900	T15	2	4270	25.000	866	V05	1	1466	25.000	900
TR01	1	9250	25.000	900	*HB05	2	3733	18.249	900	*OR1	12	1305	0.000	900
TG01	1	7460	25.000	900	V10	1	3708	25.000	900	*OR2	8	1305	0.000	900
T07	1	7460	25.000	900	J01	1	3067	25.000	900	*OR3	10	1305	0.000	900
T17	1	7460	25.000	664	J01A	1	3067	25.000	900	J03	1	1267	25.000	900
*HB09	1	7406	18.249	900	J13	1	2852	25.000	900	J03A	1	1267	25.000	900
*FR1	1	7380	25.000	900	J13A	1	2852	25.000	900	V01	1	1201	25.000	900
*HB06	1	7335	18.249	900	J04	1	2807	25.000	900	*HB02	1	1187	18.249	900
T03	1	6180	25.000	900	J05	1	2807	25.000	900	J14	1	1045	25.000	900
T04	1	6180	25.000	900	J05A	1	2807	25.000	900	J07	1	1007	25.000	900
T05	3	6180	25.000	742	J08	1	2802	25.000	900	J11	1	1002	25.000	900
*HB04	1	6069	18.249	900	J08A	1	2802	25.000	900	*R08	1	958	25.000	900
*FR3	1	5880	25.000	900	J08B	1	2802	25.000	900	V08	1	950	25.000	900
HT01	1	5693	25.000	900	J08C	1	2802	25.000	900	V06	1	945	25.000	900
HT02	1	5693	25.000	900	J09	1	2802	25.000	900	*R09	1	901	25.000	900
HTG01	1	5693	25.000	900	*HB08	1	2470	18.249	900	*R12	1	901	25.000	900
TR02	1	5693	25.000	900	*HB03	1	2460	18.249	900	*R11	6	891	25.000	900
*FR2	1	5470	25.000	900	V04	1	2334	25.000	900	*R13	2	891	25.000	900
*HB01	1	5164	18.249	900	J02	1	2167	25.000	900	*R10	2	846	25.000	900
T06	3	3068	25.000	900	J02A	1	2167	25.000	900	*R10A	1	846	25.000	900
T02	1	4680	25.000	900	J15	1	1945	25.000	900	*HB07	1	646	18.249	900
T08	1	3708	25.000	900	J15A	1	1945	25.000	900	V02	1	507	24.999	900
T09	2	3708	25.000	743	V09	2	1913	25.000	900	V03	1	445	25.000	900
T11	1	4680	25.000	900	J06	1	1907	25.000	900					
T12	2	4680	25.000	772	J06A	1	1907	25.000	900					

Total quantity : 133

The computer design input has been carried out by:

Signed: .....

Date: ...Thursday, 8 April 2021....

Name of Detailer: Nick Bishop

Qualifications and Title: Detailer

On behalf of: **PlaceMakers - Frame & Truss**

STUDLOK™ LINTEL FIXING OPTIONS FOR ON-SITE

ALTERNATIVE TO TABLE 8.14 & FIGURE 8.12 NZS 3604:2011

TYPE F 4.0kN

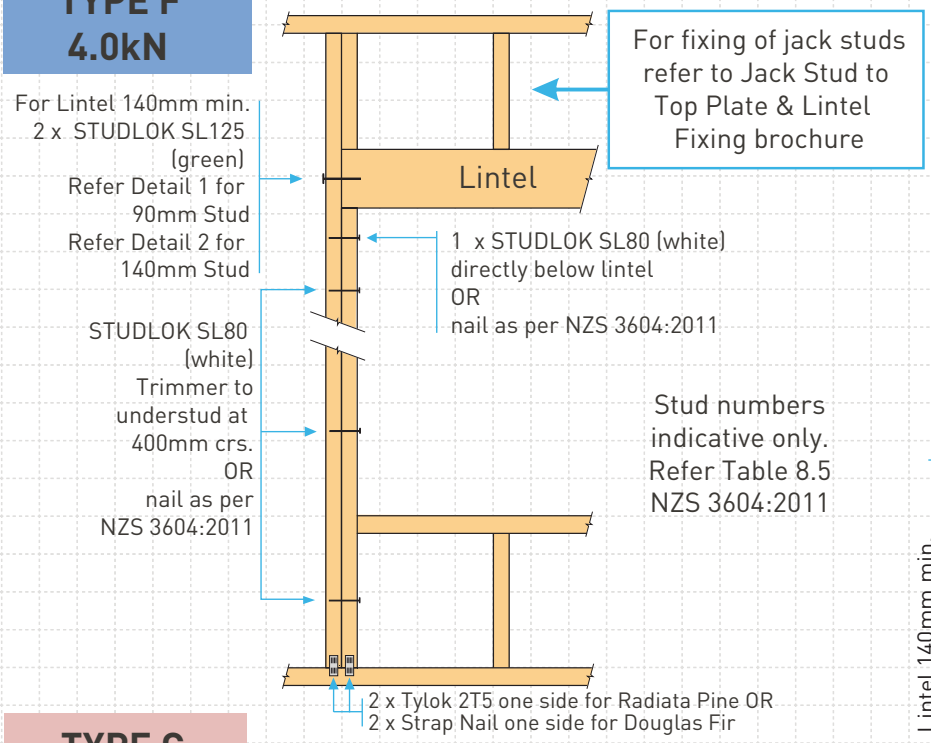

TYPE G 7.5kN

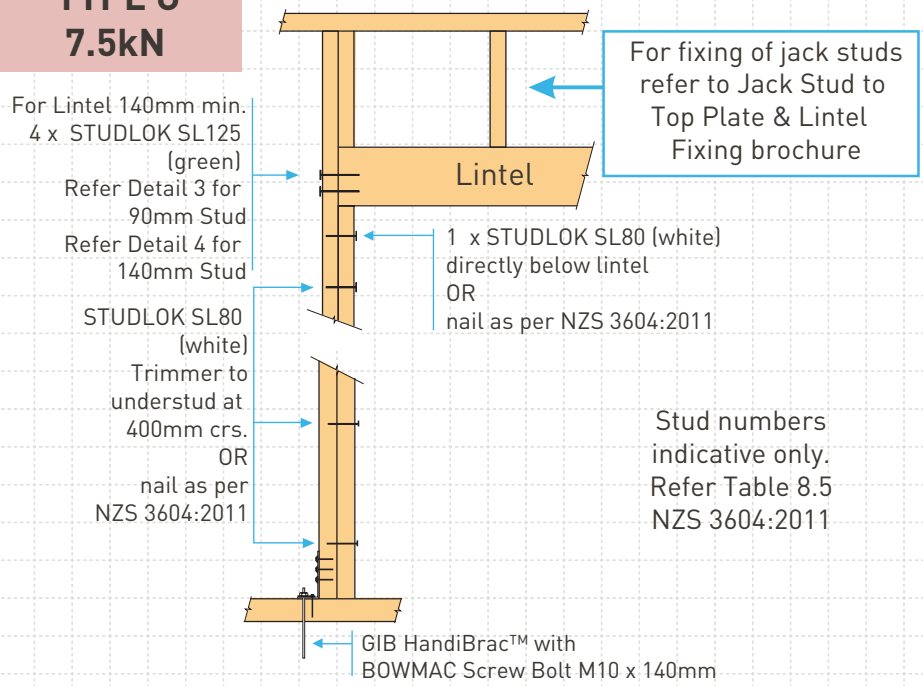

OR

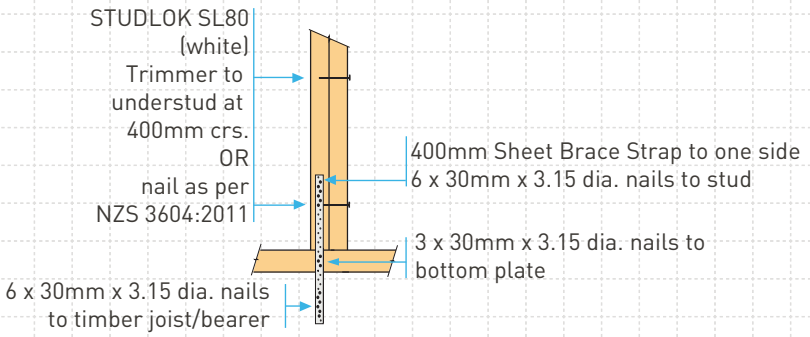

Detail 1

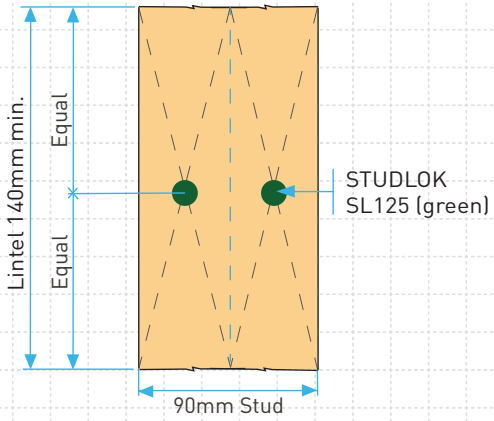

Detail 2

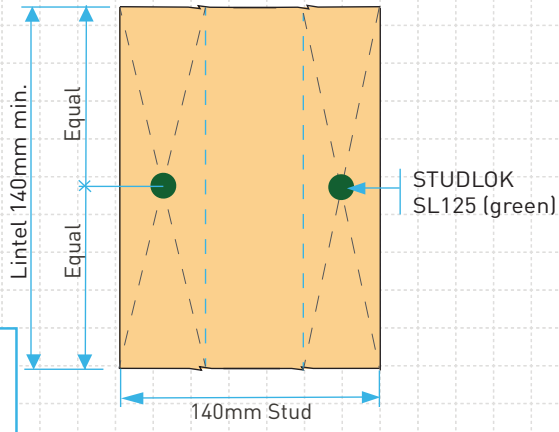

Detail 3

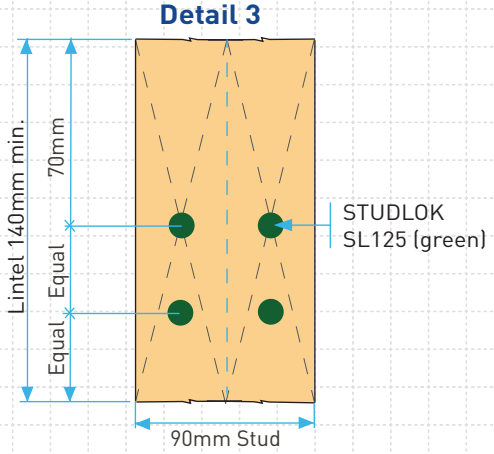

Detail 4

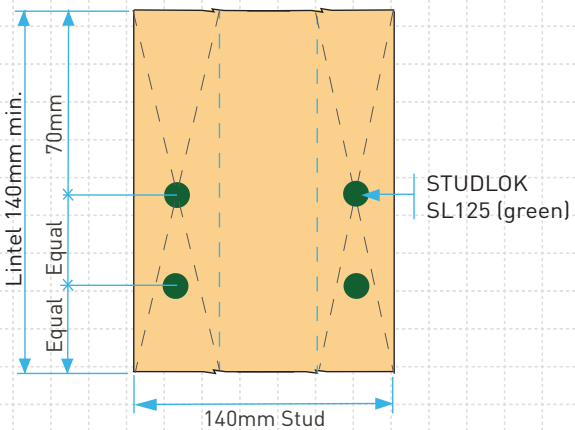

MiTek®

© Copyright 2020 MiTek Holdings, Inc. All rights reserved. Oct 2020

STUDLOK™ LINTEL FIXING OPTIONS FOR ON-SITE

ALTERNATIVE TO TABLE 8.14 & FIGURE 8.12 NZS 3604:2011

TYPE H
13.5kN

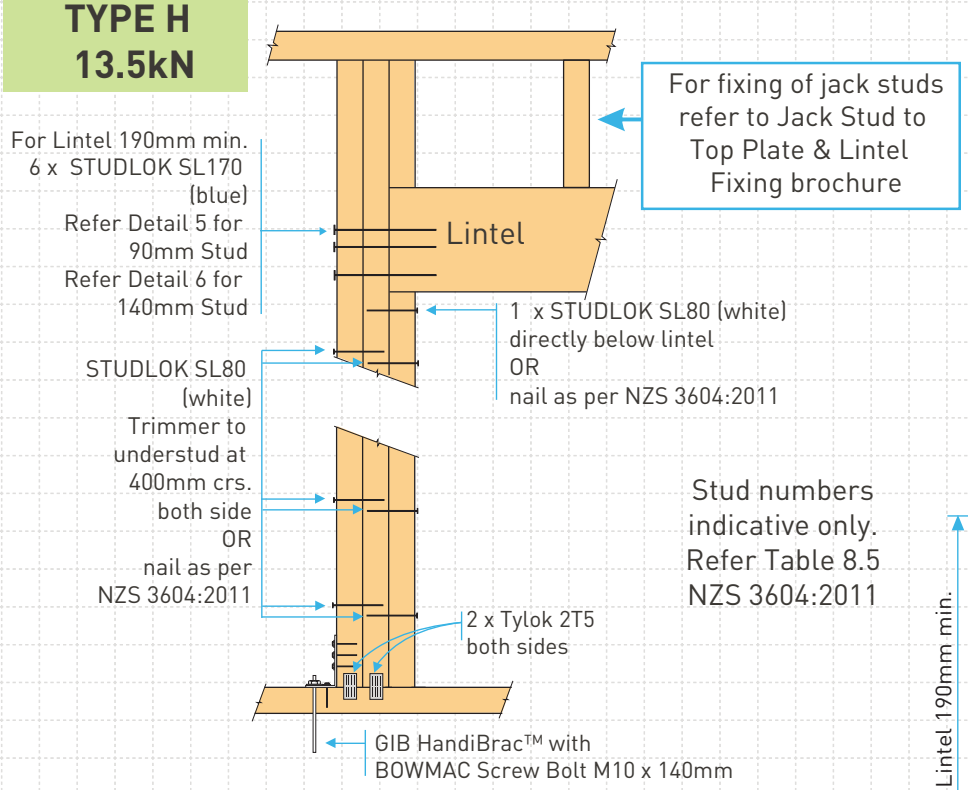

Stud numbers indicative only. Refer Table 8.5 NZS 3604:2011

Detail 5

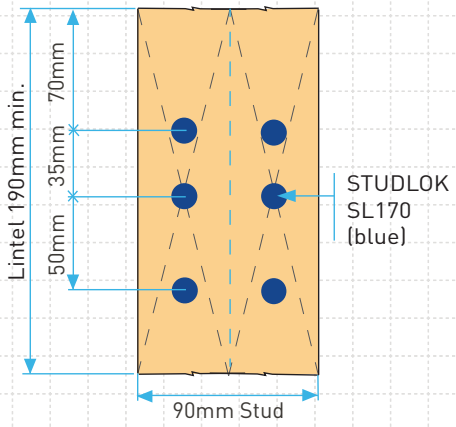

Detail 6

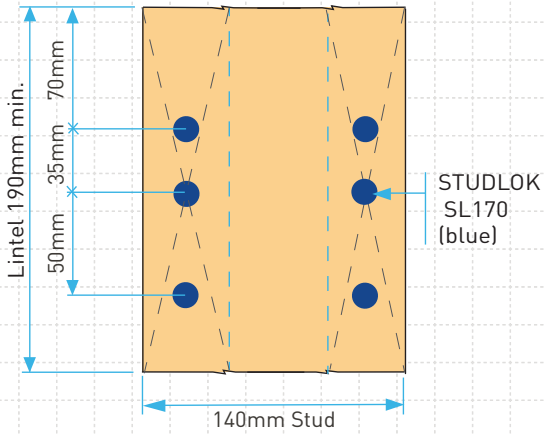

OR

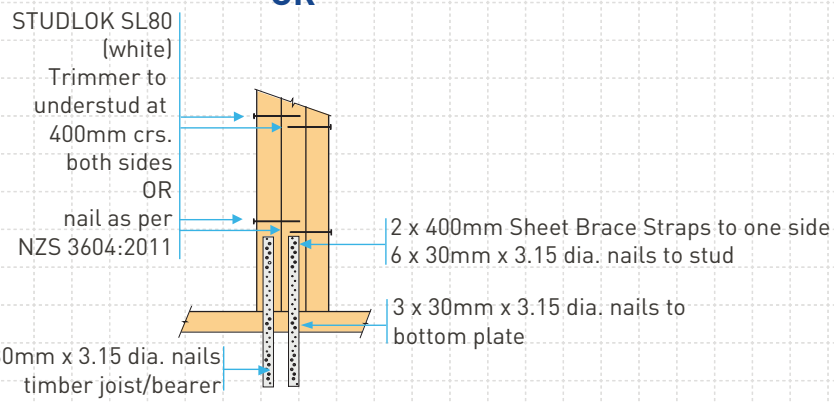

NOTE: STUDLOK TYPE F 4.0 kN fixing can be used for TYPE E 1.4 kN fixing

MiTek®

© Copyright 2020 MiTek Holdings, Inc. All rights reserved. Oct 2020

LUMBERLOK®

PLATE-LOK
6kN CAPACITY CONNECTOR

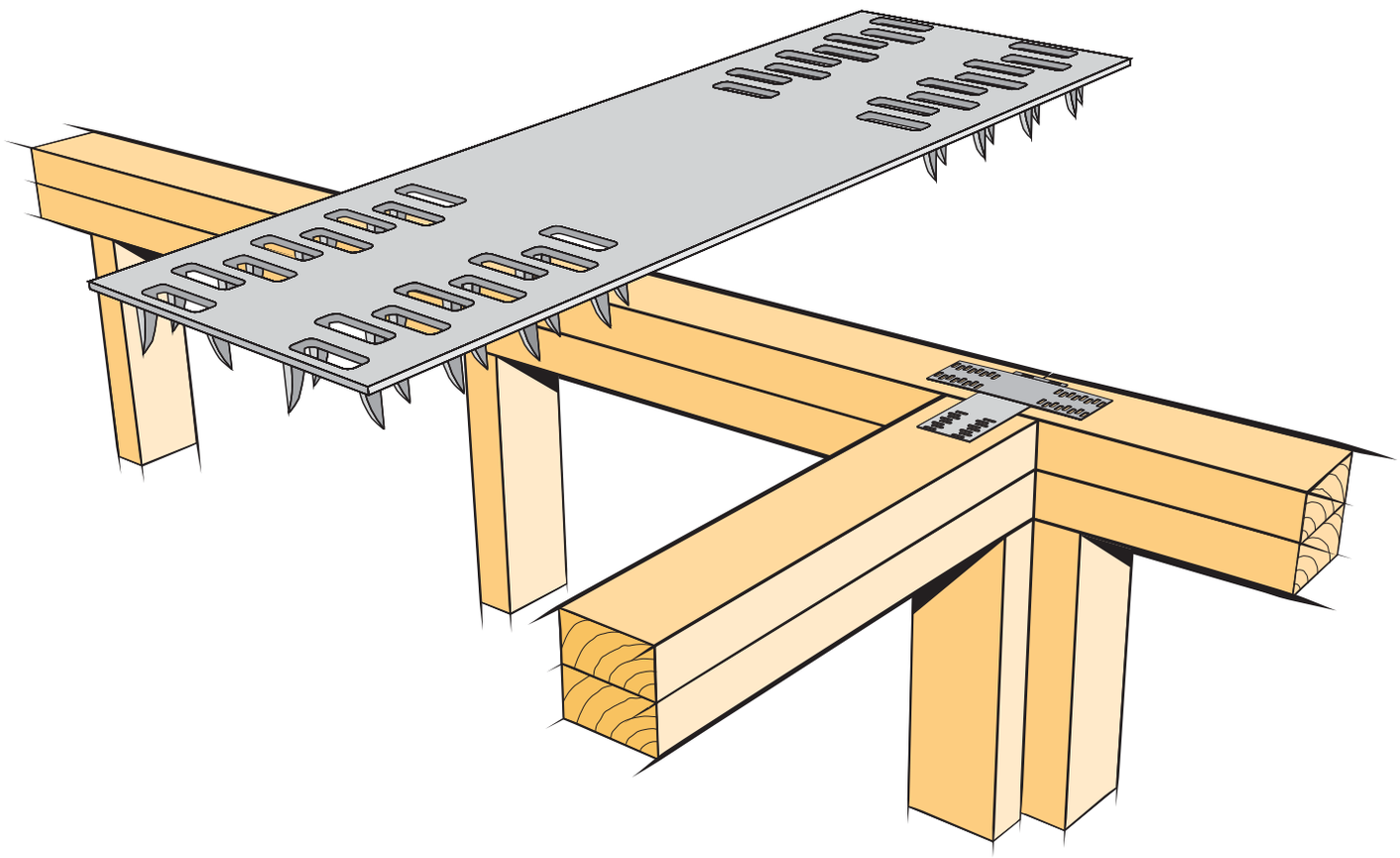

- ★ The LUMBERLOK PLATE-LOK is ideally suited for right angle wall connections with a unique clear centre section to allow easy overlapping
- ★ Suitable for use in SG8 Radiata pine/Douglas fir & LVL8 top plates
- ★ This brochure also provides simple guidelines for the interpretation of Clause 8.7.3 NZS 3604:2011 for top plate connections
- ★ The LUMBERLOK PLATE-LOK also provides a simple solution for a 6kN capacity connection where required by NZS 3604:2011

Code: **PLATELOK**
Material: **0.95mm G300 Z275 Galvanised Steel 150x50mm**
Packed: **100 per Carton**

MiTek®

© Copyright 2016 MiTek Holdings, Inc.
All rights reserved.

TOP PLATE CONNECTIONS AS REQUIRED BY CLAUSE 8.7.3 NZS 3604:2011

① Top plate joints for walls at right angles to external walls:

(a) Walls with bracing elements not exceeding 125 bracing units (BU) require a 6kN capacity connection to one external wall.

(b) Walls with bracing elements not exceeding 250 BU require a 6kN capacity connection to two external walls.

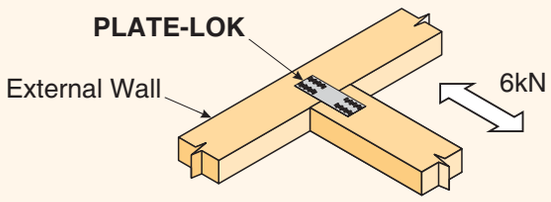

Wall bracing up to 125 BU

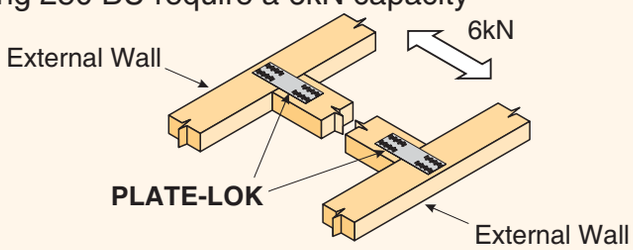

Wall bracing between 125 BU & 250 BU

② Details of top plate joints using LUMBERLOK PLATE-LOK at "T" junction walls are shown below:

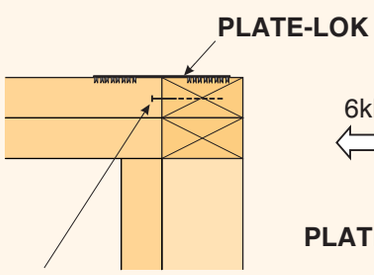

Note: Fix with a pair of LUMBERLOK Blue Screws on sides of top plate for Douglas fir and LVL8 only

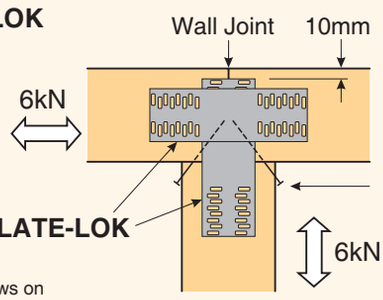

Centre Wall Joint

Blue Screw
(see note)

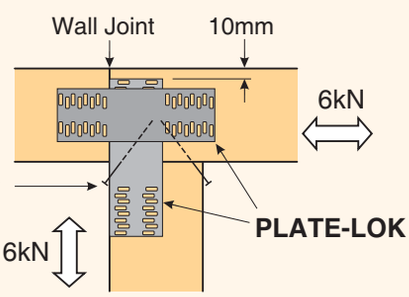

Side Wall Joint

③ Top plate joints for all walls in line that have wall bracing elements exceeding 100 BU or have a ceiling diaphragm attached require a 6kN capacity connection as per Figure 8.15 NZS 3604:2011.

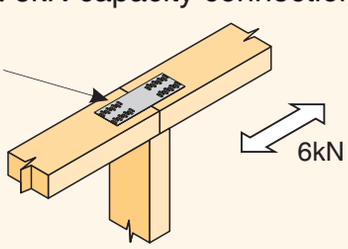

④ Top plate joints for walls at right angles and in line that have either no bracing elements or are on a single storey building only with wall bracing demands not exceeding 100 BU require a 3kN capacity connection as per Figure 8.15 & 8.16 NZS 3604:2011.

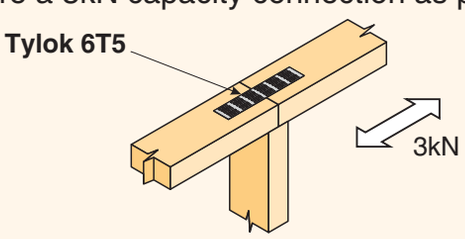

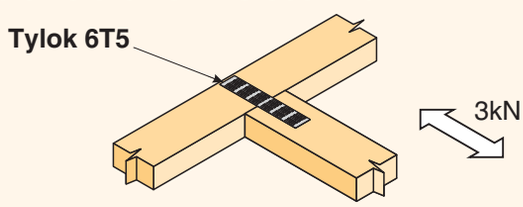

MiTek New Zealand Limited

AUCKLAND
PO Box 58-014, Botany 2163
Phone: 09-274 7109
Fax: 09-274 7100

CHRISTCHURCH
PO Box 8387, Riccarton 8440
Phone: 03-348 8691
Fax: 03-348 0314

www.miteknz.co.nz

MITEK® LUMBERLOK® BOWMAC®

© Copyright 2016 MiTek Holdings, Inc.
All rights reserved.

These plans are provided solely to enable the builder to erect the prenail on site. They are not intended for any other purpose and PlaceMakers will not accept any liability arising from any other use of these plans.
PLEASE CONTACT PLACEMAKERS FRAME & TRUSS IF ANY ON SITE REMEDIAL WORK IS REQUIRED.
THERE WILL BE NO COMPENSATION FOR WORK DONE WITHOUT PLACEMAKERS FRAME & TRUSS WRITTEN AUTHORITY.

ALL WALLS WITH DOUBLE TOP PLATE DO NOT HAVE CEILING PLATE

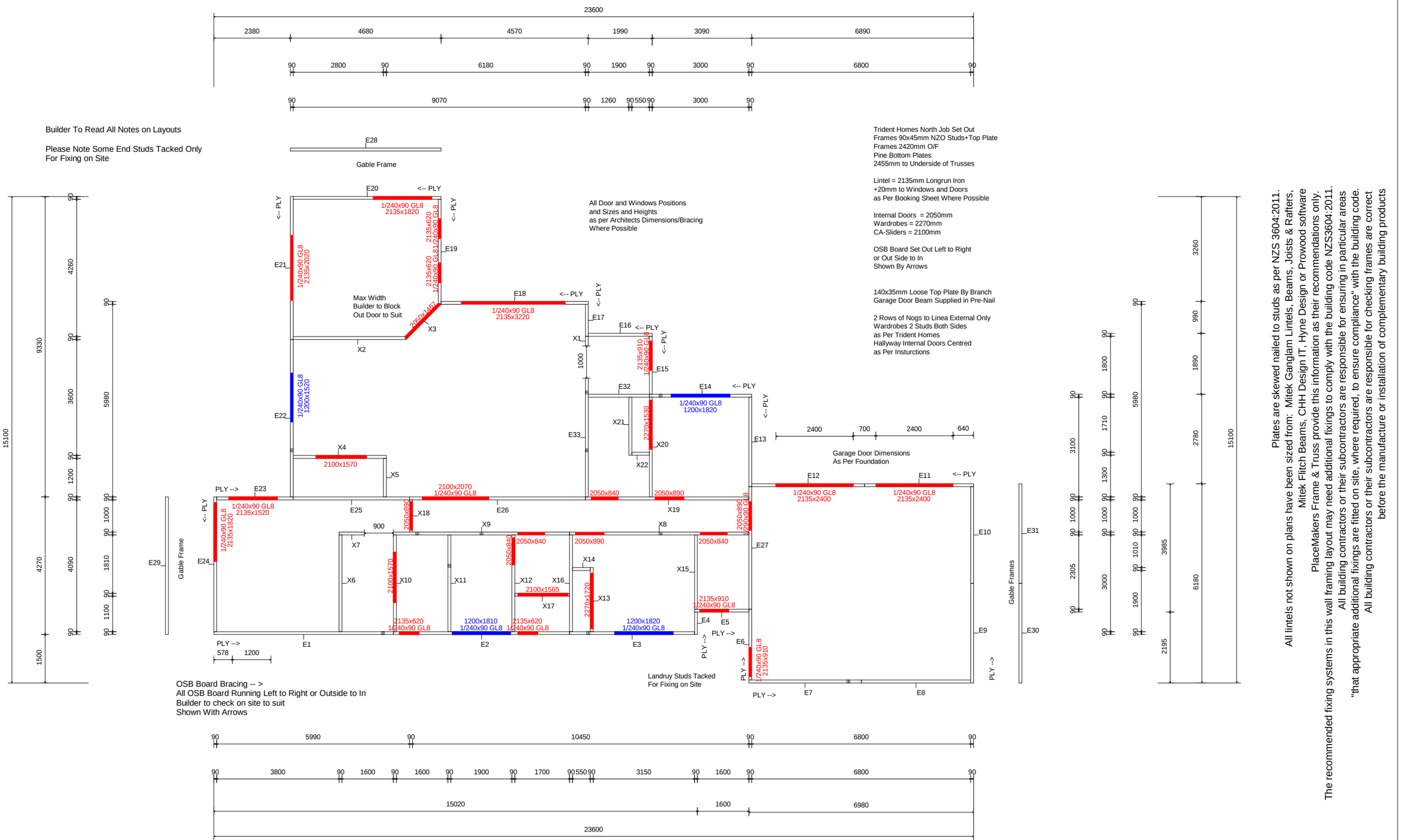

Plates are skewed nailed to studs as per NZS 3604:2011.
All lintels not shown on plans have been sized from: Mitek Ganglam Lintels, Beams, Joists & Rafters,
PlaceMakers Frame & Truss, Mitek Flitch Beams, CHH Design IT, Hyne Design or Prowood software
The recommended fixing systems in this wall framing layout may need additional fixings to comply with the building code NZS3604:2011.
All building contractors or their subcontractors are responsible for ensuring in particular areas
"that appropriate additional fixings are fitted on site, where required, to ensure compliance" with the building code.
All building contractors or their subcontractors are responsible for checking frames are correct
before the manufacture or installation of complementary building products

Ground Floor

Consent Number : BC200465A

Frame Dimension Layout

PlaceMakers Know how. Can do.
FRAME & TRUSS
nick.bishop@placemakers.co.nz
PM Frame & Truss
1 Koru Place
Harewood
Christchurch
Ph : 03-359-9560
Cell : 0277223400

Trident Homes North
Olliver Residence
4 Pukeko Way
Amberley

Drawn :	Nick Bishop	CFT Reff :	N198239
Date :	9 Apr,2021	Branch Reff :	20-198239

Stud to top plate

For alternative fixing see the "Mitek Onsite Guide 2012"

FIXING TYPE A
0.7kN

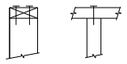

2/90x3.15 plain steel wire nails
driven vertically into stud.

FIXING TYPE B
4.7kN

Single top plate Double top plate

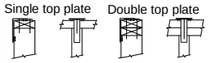

OR

2/90x3.15 plain steel wire nails
driven vertically into stud
plus LUMBERLOK Stud Strap

FIXING TYPE B 4.7kN
Option for Internal Walls

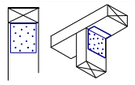

2/90x3.15 plain steel wire nails
driven vertically into stud
plus 6kN Stud Anchor (CPC80)

Rigid Air Barriers

If Ecoply Barrier or James Hardies RAB Board or HomeRAB is used
on all external walls, the nailing pattern below eliminates
the need for any other stud to top plate fixing on those walls.
Lintel fixings and loadbearing internal wall fixings will still be required.

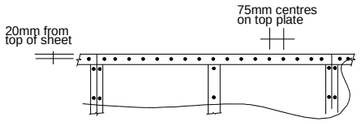

See Ecoply Rigid Air Barrier Installation Manual
OR
James Hardies Rigid Air Barrier Installation Manual
for nail selection and nailing pattern on rest of sheet.

Lintel Fixing

- For alternative fixing see the "Mitek Onsite Guide 2012"
- Stud numbers indicative only. Refer Table 8.5 NZS 3604:2011.
- Minimum fixing to be Type E unless otherwise specified.
- Fix top jacks to top plates as per stud to top plate fixing
- Where Rigid Air Barrier is used,
continue top plate nailing pattern on top jacks and lintels.
- If Lumberlok Stud Straps do not reach lintel,
use Sheet Brace Strap (6 nails each end) to connect top jack and lintel

TYPE E
1.4kN

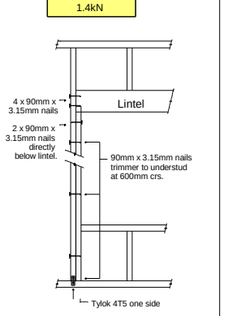

TYPE F
4.0kN

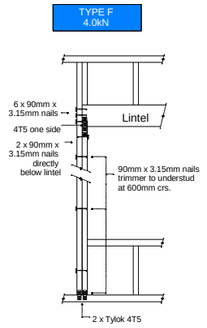

TYPE G
7.5kN

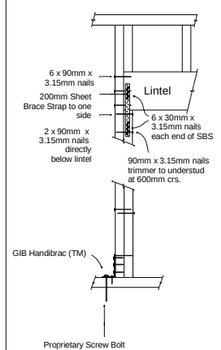

TYPE H
13.5kN

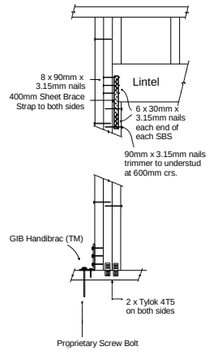

Rigid Air Barries Used - OSB Board
No External Stud Staps Required if Air Barries Nailing is Used

No Mitek Studlok or Lintels System Fitted

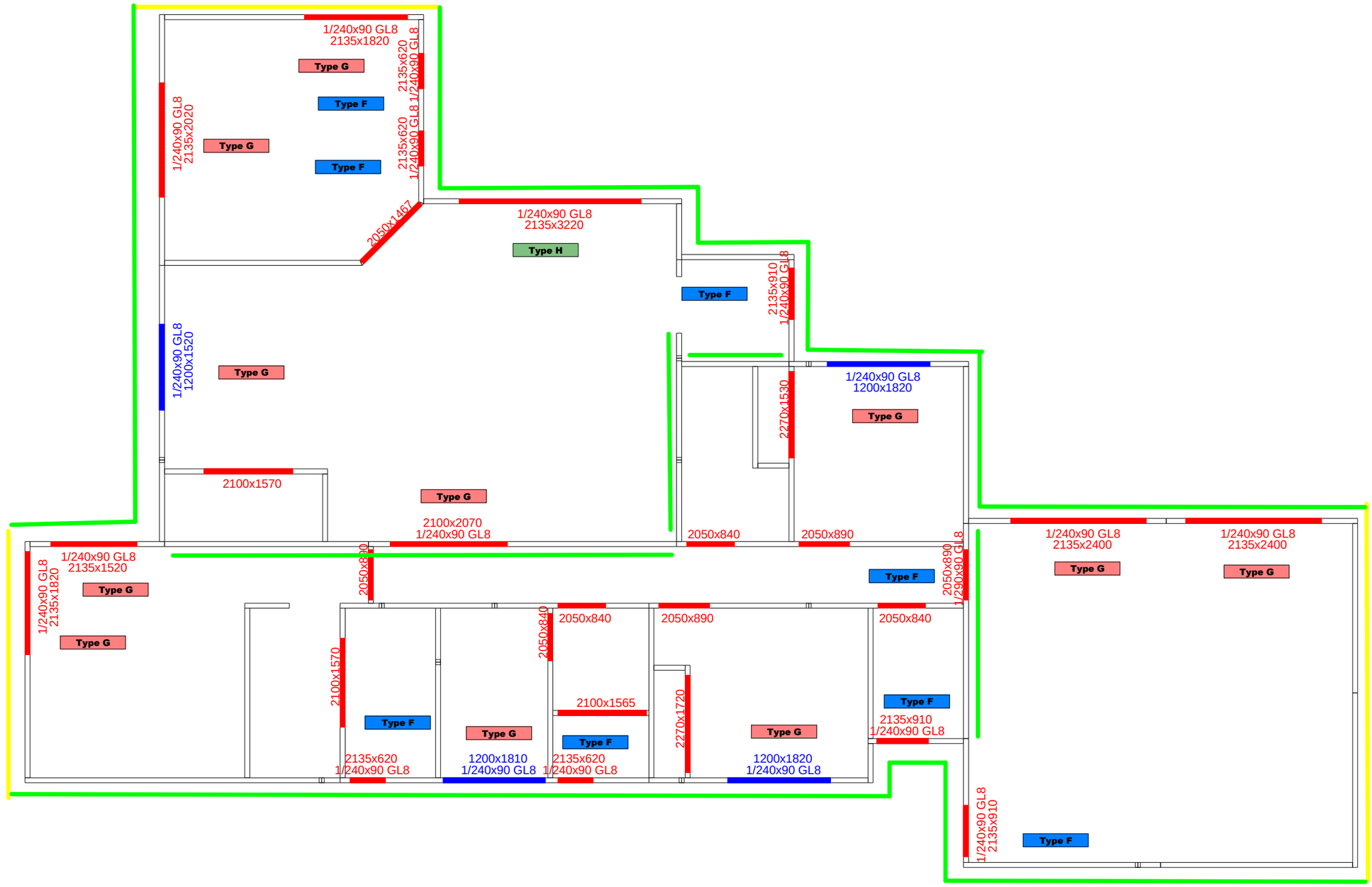

Gable Fixing as Per NZS3604/Mitek

Ground Floor

Consent Number : BC200465A

Stud To Top Plate And Lintel Fixings

PlaceMakers Know how. Can do.
FRAME & TRUSS
nick.bishop@placemakers.co.nz

PM Frame & Truss
1 Koru Place
Harewood
Christchurch
Ph : 03-359-9560
Cell : 0277223400

Trident Homes North
Olliver Residence
4 Pukeko Way
Amberley

Drawn :	Nick Bishop	CFT Reff :	N198239
Date :	9 Apr,2021	Branch Reff :	20-198239

Gable Fixing as Per NZS3604/Mitek

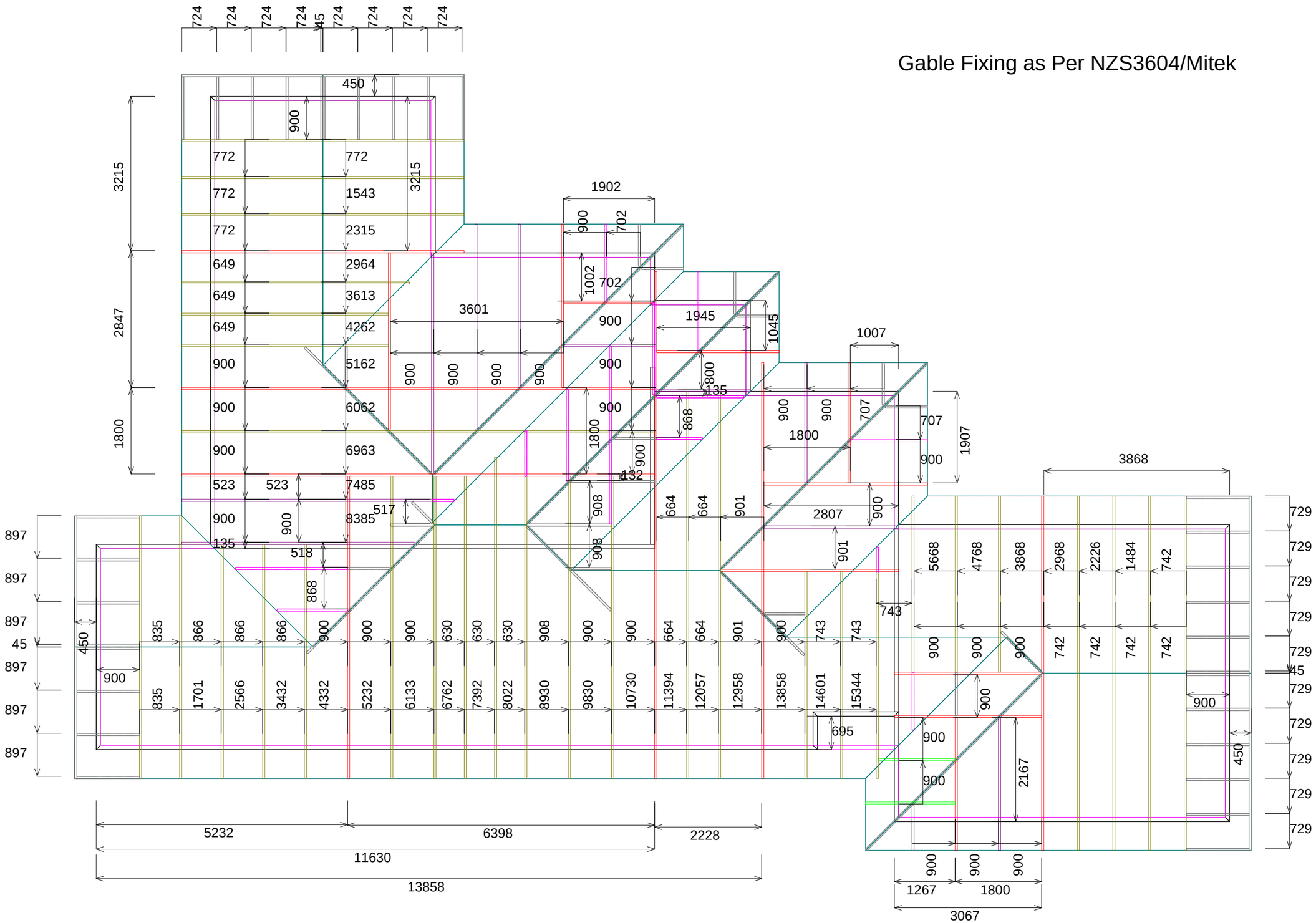

Ground Floor

Consent Number : BC200465A

Truss Dimension Layout

Drawn :	Nick Bishop	CFT Reff :	198239
Date :	9 Apr,2021	Branch Reff :	20-198239

PM Frame & Truss
1 Koru Place
Harewood
Christchurch
Ph : 03-359-9560
Cell : 0277223400
nick.bishop@placemakers.co.nz

Trident Homes North
Olliver Residence
4 Pukeko Way
Amberley

PlaceMakers Know how. Can do. | FRAME & TRUSS

Asbuilt Layout

Roof Pitch	25.000
Roof Material	Galv Iron .5mm
TC Restraints	900
Overhang	600
Wind Zone	High
Roof Snow	0.441
BC Restraints	600
Ceiling Material	Metal battens fixed to BC

Trusses And Rafters At 900 Centres
Unless Stated Otherwise

Fixings

- O = CT200 (LH & RH) Pair
- G = 9kN TTP
- K = 16kN TTP
- X = 47x90 JH
- Z = 47x120 JH
- P = 47x190 JH
- E = 95x165 JH
- M = Multigrips
- SBS = SBS400
- SP = Split Hanger SP180
- NP = Nail On Plate

Wiredogs Fixing Per Drawing\Note Below

Please contact PlaceMakers Frame & Truss Manufacturing if any on site remedial work is required.There will be no compensation for work done without PlaceMakers Frame & Truss Manufacturing written authority.

Job No.	198239
Job Name	Trident Homes North
Address	Olliver Residence 4 Pukeko Way Amberley
Consent #	BC200465A

Drawn	Nick Bishop
Date	9 Apr,2021
Main Ph	03-359-9560
Cell Ph	0277223400
Email	nick.bishop@placemakers.co.nz

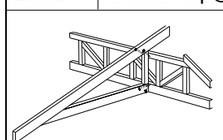

All Jack truss to truss fixings not indicated on the layout are to be fixed with a pair of 90mm nails.

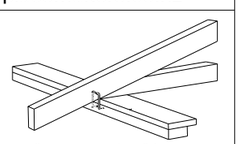

All truss to top plate fixings not indicated on the layout are to be fixed with 2/100 x 3.75 skewed nail + 2 wire dogs.

Note: Where Internal Load-Bearing Walls are shown on layout Fixings required to all Trusses.

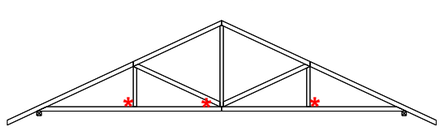

Trusses need bottom chord Restraints at
* 1800 Centres
if Rondo Metal Batten Clip System used [Not Directly Fixed]

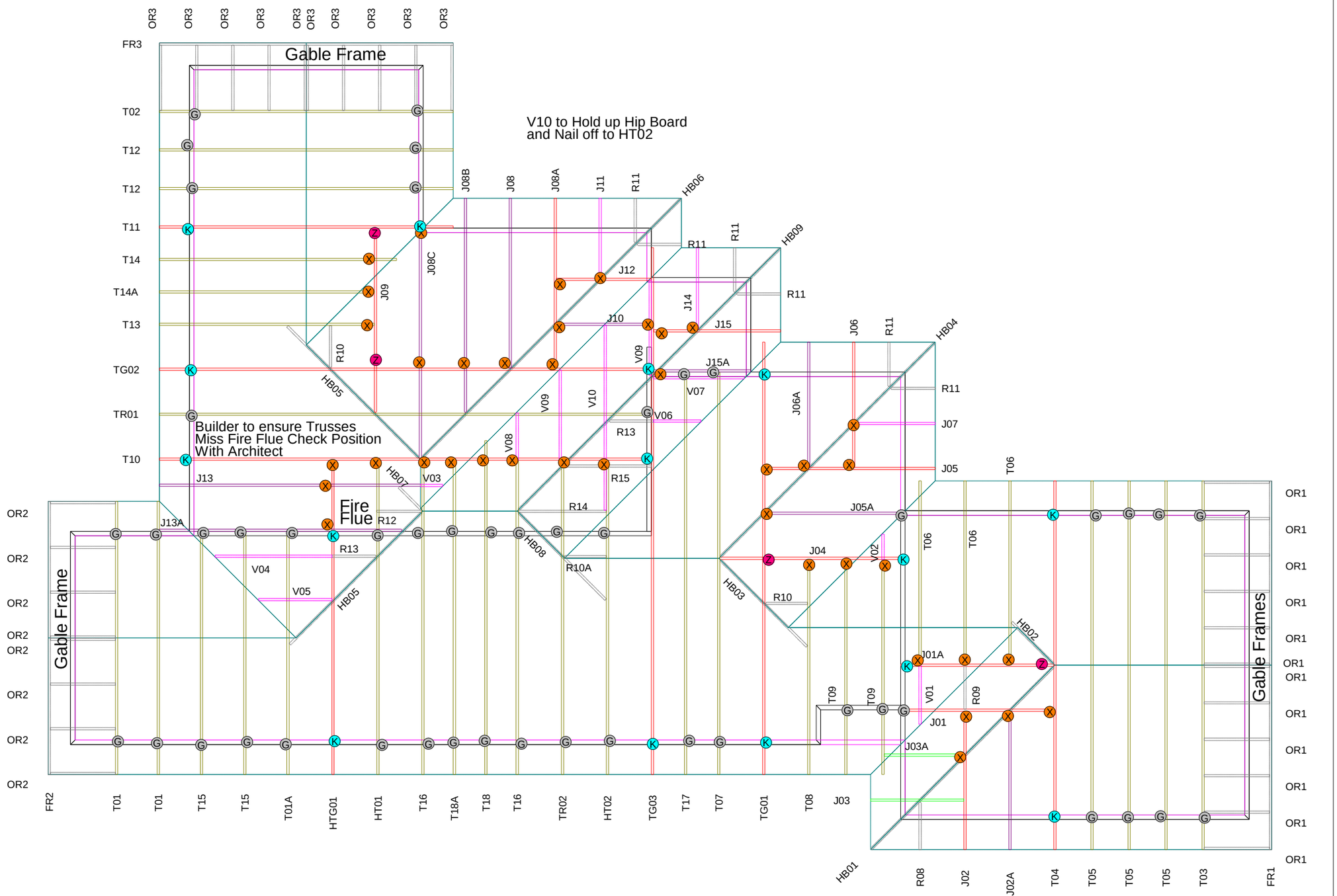

09/2011

MiTek®

GABLE END BRACING
OVER ROOF SECTION OF END WALLS



- ★ Covers bracing of the roof section on gable end construction.
- ★ Includes bracing on extra high gables.
- ★ All timber to be minimum grade SG8 as defined in NZS 3604:2011 apart from gable end webs which are either SG6 or SG8 (see Tables 1A & 1B).
- ★ Tables cover gable end truss installed as single component 45mm thick, double component 90mm thick, 45x70mm or 45x90mm webs on flat.
- ★ Design assumes restraints are provided at the ceiling and roof lines.
- ★ Bracing covers loading conditions as per NZS 3604:2011 up to Extra High wind and includes full height brick veneer gables.

MiTek®

© Copyright 2011 MiTek Holdings, Inc.
All rights reserved.

TABLE 1A - STRONGBACK LOCATION FOR WEBS @ 600MM CRS.

WIND ZONE	MAXIMUM STRONGBACK HEIGHT (h)											
	70x45 Web		90x45 Web		Double Component Gable End Webs 2/ 70x45		Double Component Gable End Webs 2/ 90x45		45x70 on flat		45x90 on flat	
	SG6	SG8	SG6	SG8	SG6	SG8	SG6	SG8	SG6	SG8	SG6	SG8
LOW	1800	2000	2000	2200	2300	2550	2500	2750	2450	2700	3150	3450
MEDIUM	1650	1800	1800	2000	2100	2300	2250	2500	2150	2450	2800	3150
HIGH	1450	1600	1600	1750	1850	2050	2000	2200	1800	2150	2350	2800
VERY HIGH	1300	1500	1450	1600	1700	1850	1850	2050	1600	1900	2050	2450
EXTRA HIGH	1150	1350	1300	1500	1600*	1750*	1750*	1900*	1450	1700	1850*	2200*

TABLE 1B - STRONGBACK LOCATION FOR WEBS @ 400MM CRS.

WIND ZONE	MAXIMUM STRONGBACK HEIGHT (h)											
	70x45 Web		90x45 Web		Double Component Gable End Webs 2/ 70x45		Double Component Gable End Webs 2/ 90x45		45x70 on flat		45x90 on flat	
	SG6	SG8	SG6	SG8	SG6	SG8	SG6	SG8	SG6	SG8	SG6	SG8
LOW	2100	2300	2250	2500	2650	2900	2850	3150	2800	3100	3600	3900
MEDIUM	1900	2100	2050	2250	2400	2650	2600	2850	2550	2800	3300	3600
HIGH	1700	1850	1850	2000	2100	2350	2300	2550	2250	2500	2850	3200
VERY HIGH	1550	1700	1700	1850	1950	2150	2100	2350	1950	2300	2550	2950
EXTRA HIGH	1400	1600	1550	1750	1850*	2000*	2000*	2200*	1800	2100	2300*	2700*

*Use these values for full height brick veneer attached to gable end.
Please note that the maximum height of brick veneer on a gable end wall is 5.5m.

SELECTION PROCESS

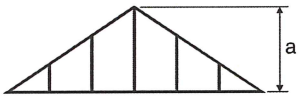

- Where (a) is less than or equal to (h) - no strongback required.

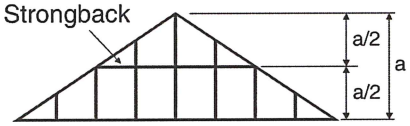

- Where (a) is greater than (h) but less than 2(h) - lower strongback is required.
- Locate the strongback at height of (a/2).

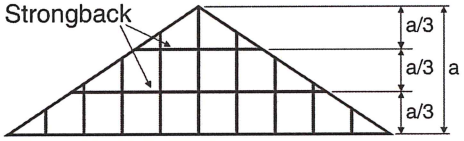

- Where (a) is greater than 2(h) but less than 3(h) - lower and upper strongbacks are required.
- Locate strongbacks at height increments of (a/3).

STRONGBACK OPTIONS

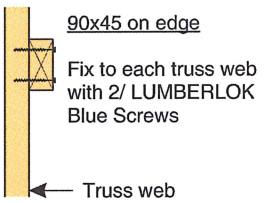

OPTION 1

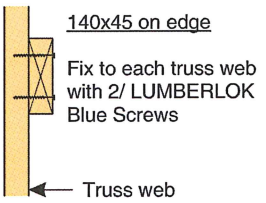

OPTION 2

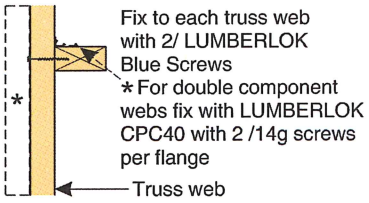

OPTION 3

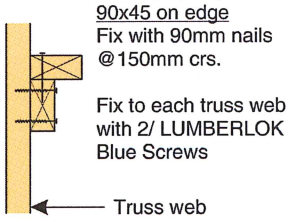

OPTION 4

TABLE 2 - STRONGBACK SPAN AND GABLE BRACE LOCATION

OPTION 1	OPTION 2	OPTION 3	OPTION 4
90x45 on edge	140x45 on edge	90x45 on flat	90x45 on flat plus 90x45 on edge
Max. span and/or gable brace location 1200mm	Max. span and/or gable brace location 1400mm	Max. span and/or gable brace location 1600mm	Max. span and/or gable brace location 2000mm

© Copyright 2011 MiTek Holdings, Inc.
All rights reserved.

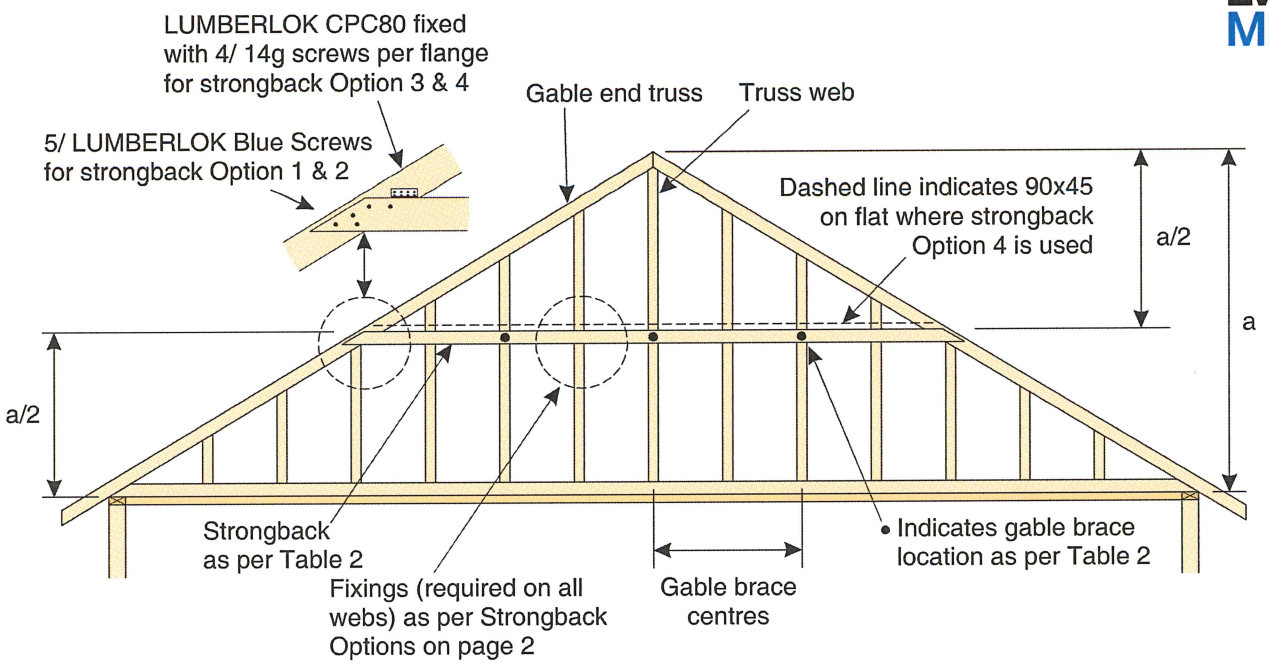

SINGLE STRONGBACK DETAILS

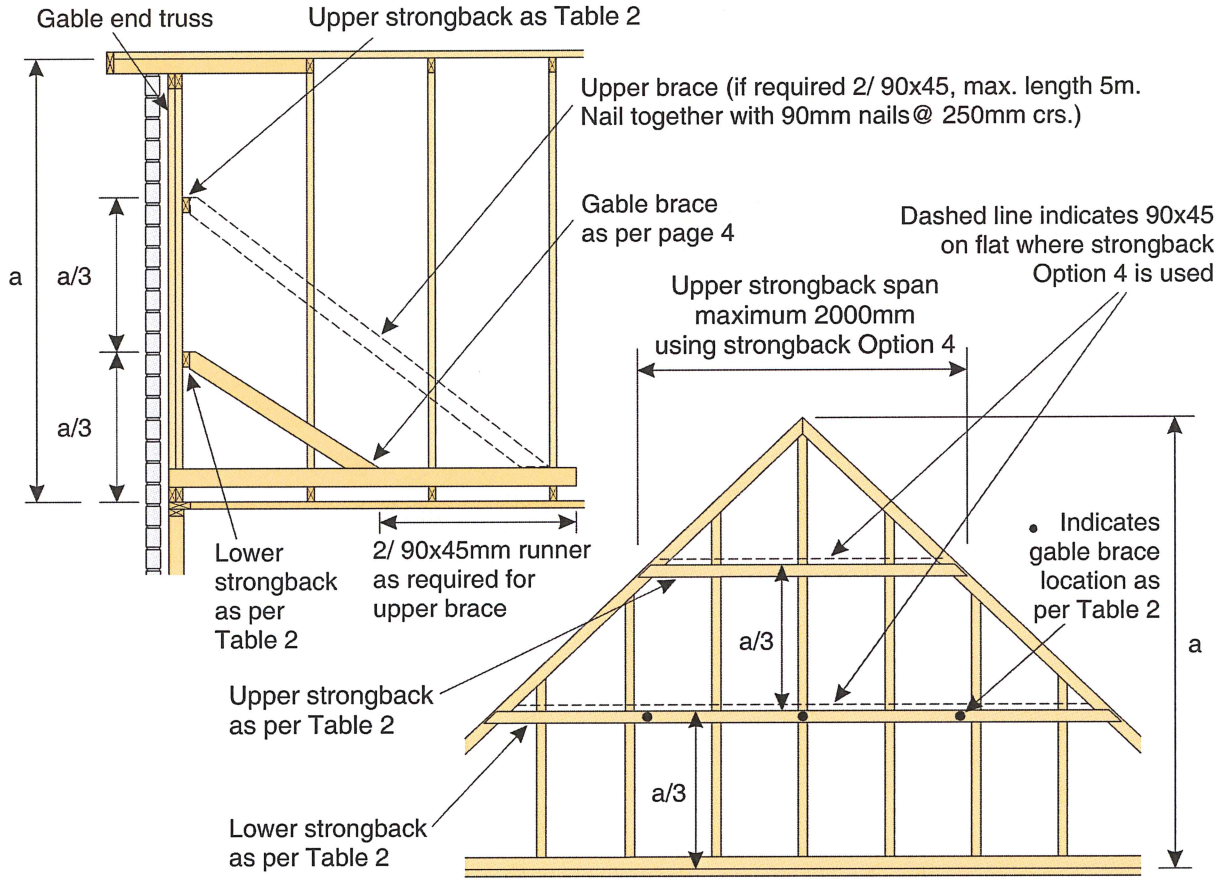

DOUBLE STRONGBACK DETAILS FOR ALL GABLE END OPTIONS (full height brick veneer option shown)

© Copyright 2011 MiTek Holdings, Inc.
All rights reserved.

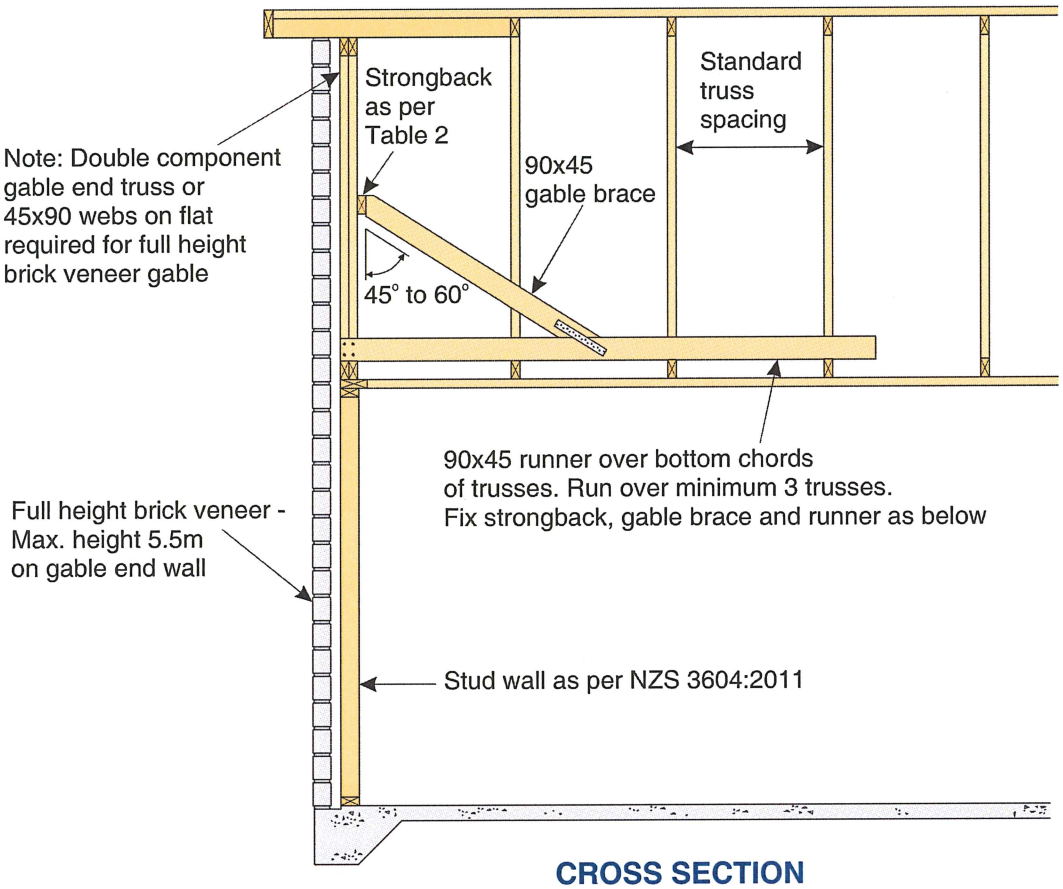

CROSS SECTION
(full height brick veneer option shown)

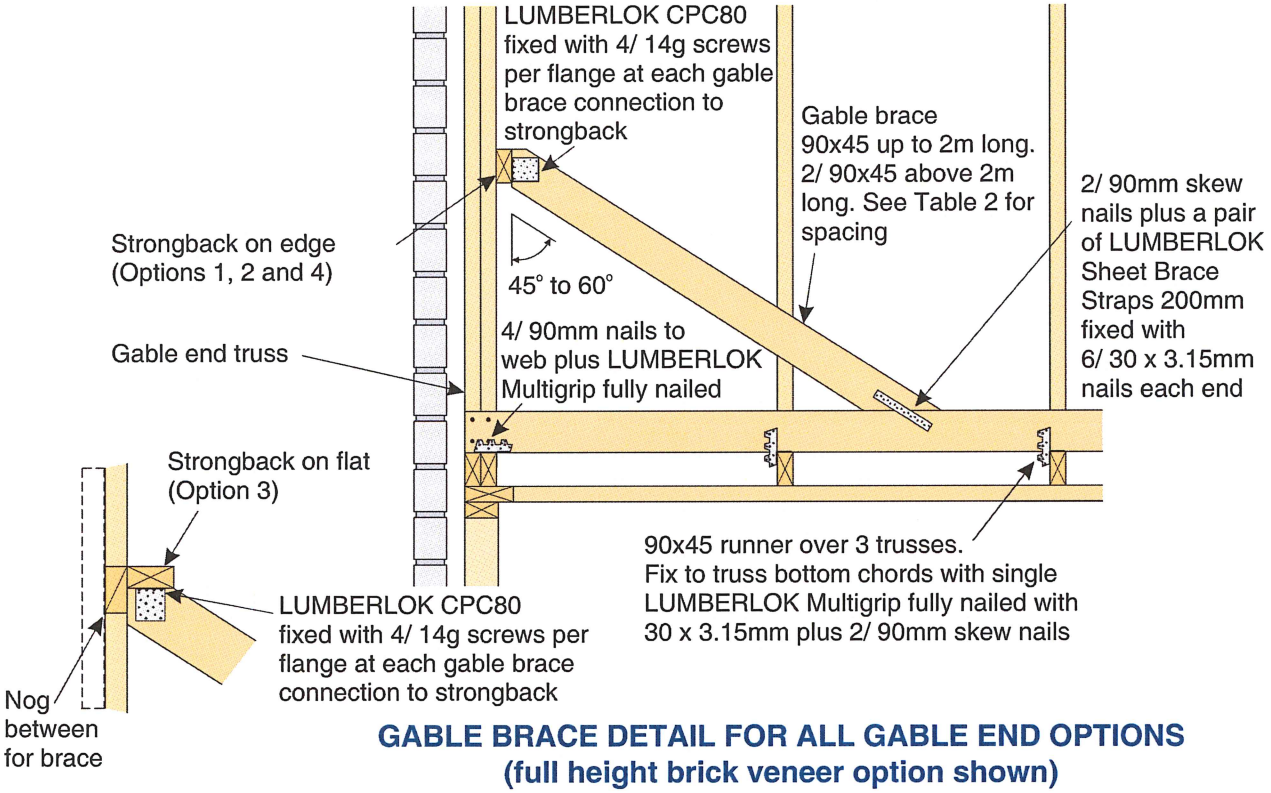

GABLE BRACE DETAIL FOR ALL GABLE END OPTIONS
(full height brick veneer option shown)

MiTek New Zealand Limited

AUCKLAND
PO Box 58-014, Botany 2163
Phone: 09-274 7109
Fax: 09-274 7100

CHRISTCHURCH
PO Box 8387, Riccarton 8440
Phone: 03-348 8691
Fax: 03-348 0314

www.miteknz.co.nz

GANG-NAIL® LUMBERLOK® BOWMAC®

© Copyright 2011 MiTek Holdings, Inc.
All rights reserved.

MiTek®

06/2011

GABLE END RAKING VERGE
OVERHANG OPTIONS



★ Covers raking verge using standard purlin overhang options.
★ Covers up to 750mm overhang using standard verge outriggers.
★ Covers up to 1200mm overhang using verge outrigger/purlin combination.

© Copyright 2011 MiTek Holdings, Inc.
All rights reserved.

OVERHANG OPTIONS

- All gable end loading parameters are based on the design considerations used in NZS 3604:2011 and covers heavy roof weight, extra high wind load and snow load Sg of up to 1.0 kPa.
- All live load considerations as per AS/NZS 1170.
- All timber to be minimum grade SG8 as defined in NZS 3604:2011.

CANTILEVER PURLIN OPTION

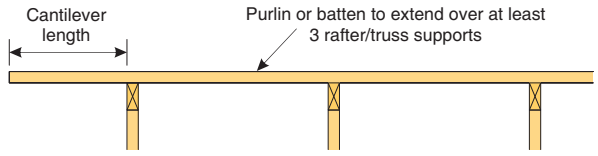

TABLE 1

PURLIN SIZE & ORIENTATION	MAX. CANTILEVER LENGTH (mm)	PURLIN CENTRES (mm)
45x45 ⊠	200	400
70x45 ⊠	300	900
90x45 ⊠	450	900

CANTILEVER OUTRIGGER OPTION

(Note: Maximum sidewall overhang of 750mm)

(See details on page 3)

TABLE 2

MAX. CANTILEVER LENGTH 750mm	OUTRIGGER SIZE & ORIENTATION	MAX. CANTILEVER LENGTH (mm)	OUTRIGGER CENTRES (mm)
	70x45 ⊠	750	600
		600	900
	90x45 ⊠	750	900
		600	1200
	90x45 ⊠	750	400
		600	600

CANTILEVER OUTRIGGER/PURLIN COMBINATION OPTION

(Note: Maximum sidewall overhang of 1200mm)

(See details on page 4)

TABLE 3

MAX. CANTILEVER LENGTH 1200mm	OUTRIGGER SIZE & ORIENTATION	MAX. CANTILEVER LENGTH (mm)	OUTRIGGER CENTRES (mm)
	45x45 Purlin ⊠ 90x45 Outrigger ⊠	1200	450
	70x45 Purlin ⊠ 90x45 Outrigger ⊠	1200	700
	90x45 Purlin ⊠ 90x45 Outrigger ⊠	1200	900

© Copyright 2011 MiTek Holdings, Inc.
All rights reserved.

CONSTRUCTION DETAILS FOR CANTILEVER OUTRIGGER OPTION

(SPANS & CENTRES AS TABLE 2 ON PAGE 2)

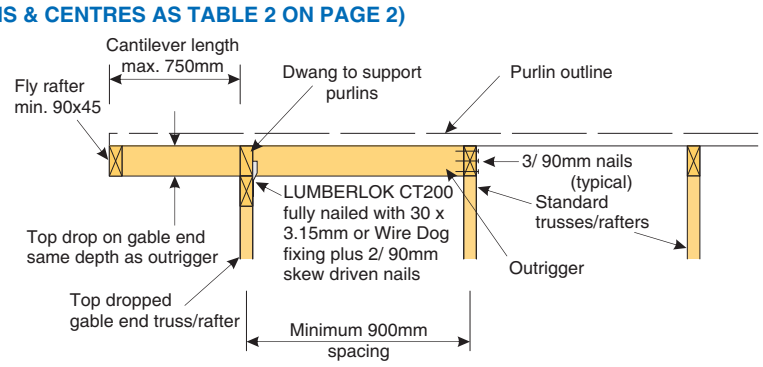

CROSS SECTION

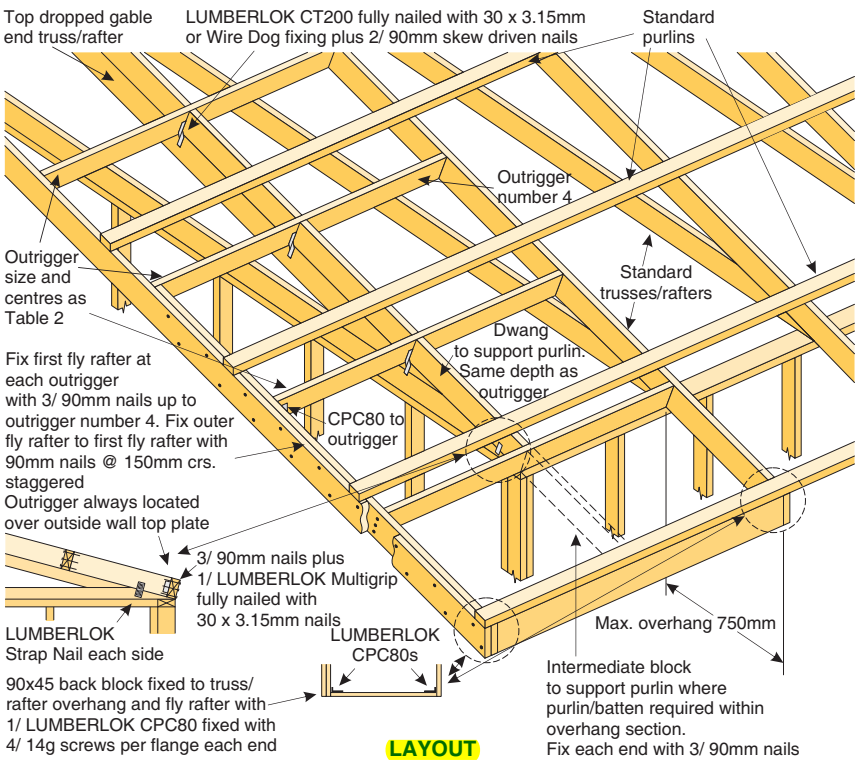

LAYOUT

© Copyright 2011 MiTek Holdings, Inc.
All rights reserved.

CONSTRUCTION DETAILS FOR OUTRIGGER/PURLIN COMBINATION

(SPANS & CENTRES AS TABLE 3 ON PAGE 2)

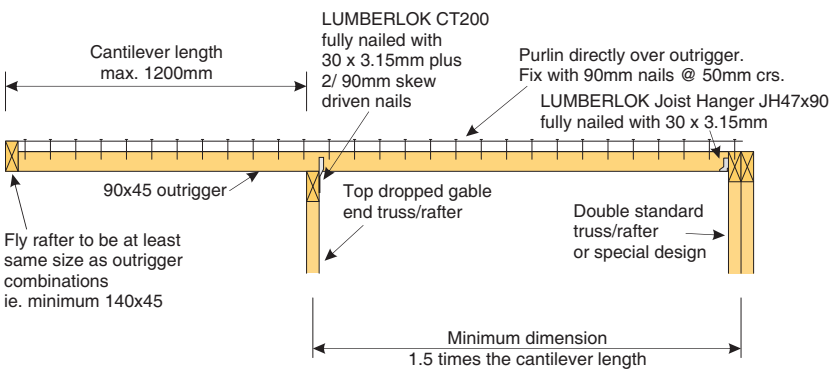

CROSS SECTION

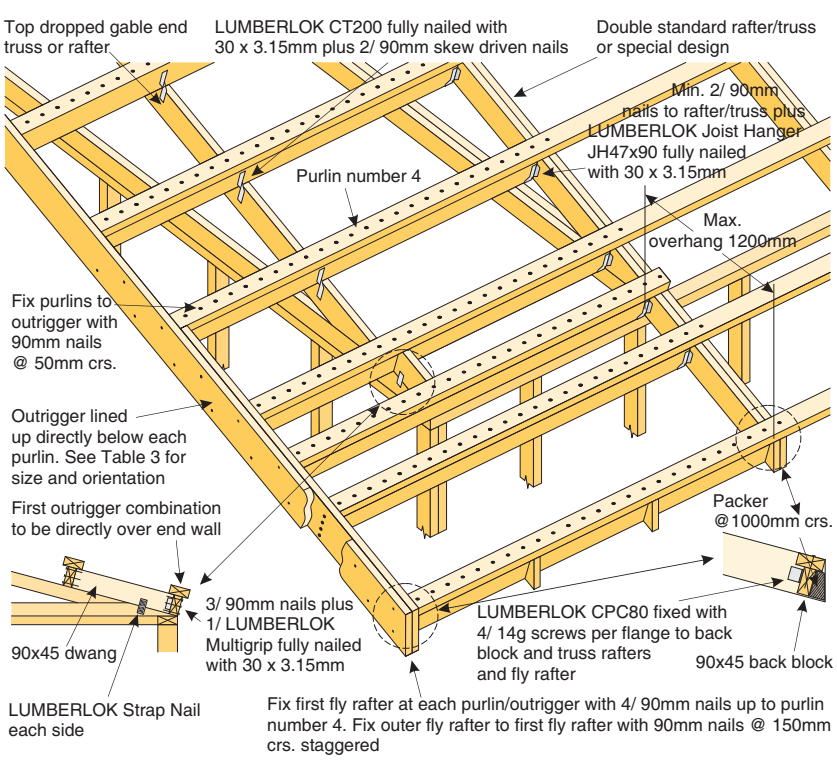

LAYOUT

MiTek New Zealand Limited

AUCKLAND
PO Box 58-014, Botany 2163
Phone: 09-274 7109
Fax: 09-274 7100

CHRISTCHURCH
PO Box 8387, Riccarton 8440
Phone: 03-348 8691
Fax: 03-348 0314

www.miteknz.co.nz

GANG-NAIL® LUMBERLOK® BOWMAC®

© Copyright 2011 MiTek Holdings, Inc.
All rights reserved.

HURUNUI DISTRICT COUNCIL
P.O. Box 13 | Amberley | 7441 | 66 Carters Road | Amberley | 7410
Phone 03 314-8816 | Fax 03 314-9181 | Email info@hurunui.govt.nz
Web hurunui.govt.nz | facebook.com/HurunuiDistrictCouncil
Skype hdc_customer_services | twitter.com/hurunuidc

FORM 6
CODE COMPLIANCE CERTIFICATE APPLICATION
Section 92, Building Act 2004

APPLICATION

Building Consent No : **BC200465** Consent issued by Hurunui District Council

THE OWNER		AGENT – APPLICANT N/A ☐ *(leave section blank)*	
Owner's Name :	Steven and Wendy Olliver	Agent's Name :	NM Build Ltd t/a Trident Homes Christchurch North
Contact Person : (if owner is not an individual)	Steven Olliver	Contact Person :	Peter Nisbet
Mailing Address :	19 South Crescent Amberley	Mailing or Billing Address :	PO Box 76-178 Northwood Christchurch
Postcode :	7410	Postcode :	8548
Street Address or Registered Office :		Street Address or Registered Office :	756 Main North Road Belfast Christchurch
Postcode :		Postcode :	8548
Mobile Phone :	027 236 4922	Mobile Phone :	0274 888 201
Phone :		Phone :	03 375 9020
After Hours Phone :		After Hours Phone :	
Landline number :		Landline number :	
Daytime phone :		Daytime phone :	
Fax number :		Fax number :	
E-mail Address :	wendyolliver62@yahoo.com.au	E-mail Address :	pnisbet@tridenthomes.nz
Website :		Website :	www.tridenthomes.nz

Note – The Agent (if appointed) will be the first point of contact for communications with the Council / Building Consent Authority regarding this application / building work and will receive all correspondence including all invoices

The Code Compliance certificate should be sent to : ☐ Owner ☑ Agent

All building work carried out under the above Building Consent was completed on - Date : 2/8/2021

The following evidence of ownership is attached to this application : ☑ Certificate of Title
☐ Sale and Purchase Agreement (only if new purchase)

SIGNATURE

I request that the Hurunui District Council Building Consent Authority issue a Code Compliance Certificate for this work (under section 95 of the Building Act 2004)

Signature of owner / or agent on behalf of and with the authority of the owner : Peter Nisbet

☐ Owner ☑ Agent Date : 2/8/2021

Note : If acting "for and on behalf", please read the following declaration before signing :

"I hereby declare that I am authorised to act as Agent of the Owner"

THE PERSONNEL WHO CARRIED OUT WORK OTHER THAN RESTRICTED BUILDING WORK	
Name of Builder : Camel Construction	Phone Number : 021 749 374
Postal Address : 78 Cainbrea Drive, Christchurch	Registration Number : 104038
E-mail Address : tim@camelconstruction.co.nz	
Name of Craftsman Plumber : Signature Plumbing Ltd	Phone Number : 027 451 4436
Postal Address : 143 Mandeville Road, RD2, Kaiapoi	Registration Number : 16161
E-mail Address : signatureplumbing@xtra.co.nz	
Name of Craftsman Gasfitter : The Gas Guys	Phone Number : 03 310 6810
Postal Address : 386 High Street, Rangiora	Registration Number : 27836
E-Mail Address : admin@gasguys.co.nz	
Name of Registered Drain-layer : Pipe Rite Drainage	Phone Number : 021 229 3015
Postal Address : 83 Youngs Road, RD1, Rangiora	Registration Number : 17121
E-mail Address : office@piperite.co.nz	
Name of Electrician : Ezibreeze Ltd	Phone Number : 03 313 5966
Postal Address : PO Box 705, Rangiora	Registration Number : 267187
E-mail Address : sharon@ezibreeze.co.nz	
Name of soild / liquid fuel burner installer :	Phone Number :
Postal Address :	Registration Number :
E-mail Address :	
Name of other Contractor / Tradesperson :	Phone Number :
Postal Address :	Registration Number :
E-mail Address :	
Add any additional persons on another (separate) sheet.	

ATTACHMENTS

The following supporting documents are attached to this application :

- ☑ Certificates / other documents from the personnel who carried out the work
- ☑ Certificates that relate to the energy work
- ☑ Evidence that Specified Systems are capable of performing to the performance standards set out in the building consent
- ☑ Memoranda from Licensed Building Practitioner(s) stating what Restricted Building Work they carried out or supervised

Notes by applicant: (Other notes or comments which you as the applicant may wish to add)

RESTRICTED BUILDING WORK

Did the Building Consent work include any restricted building work ☑ Yes ☐ No

If yes, provide the following details of all licensed building practitioners who were involved in the carrying out or supervising the restricted building work

Licensing Class	Name and address	Licensed building practitioner number (or registration number treated as being licensed under section 291 of the building Act 2004)	Description of particular work carried out or supervised
Foundations	Concrete Contractors Ltd	136522	
Carpentry	Camel Construction	104038	
Exterior Plasterer	Service Plus Install	BP132938	
Brick-layer			
Block-layer			
Roofer	Stratco	101500	

SPECIFIED SYSTEMS

Are there specified systems associate with this project? ☐ Yes (as listed below) ☑ No

The following specified systems are contained on the compliance schedule for the building and, in the opinion of the personnel who installed them, are capable of performing to the performance standards set out in the building consent.

SS1 Automatic systems for fire suppression
SS2 Emergency warning systems
SS3/1 Automatic doors
SS3/2 Access controlled doors
SS3/3 Interfaced fire or smoke doors and / or w indows
SS4 Emergency lighting systems
SS5 Escape route pressurisation systems
SS6 Riser Mains
SS7 Automatic back flow preventers
SS8/1 Passenger carrying lifts
SS8/2 Service lifts
SS8/3 Escalator and moving walks
SS9 Mechanical ventilation or air conditioning systems
SS10 Building maintenance units
SS11 Laboratory fume cupboards
SS12/1 Audio loops
SS12/2 FM radio and infrared beam transmission systems
SS13/1 Mechanical smoke control
SS13/2 Natural smoke control
SS13/3 Smoke curtains
SS14/1 Emergency power systems
SS14/2 Sign44s for SS1-13
SS15/1 Spoken information intended to facilitate evacuation
SS15/2 Final exits
SS15/3 Fire separations
SS15/4Signs for facilitating evacuation
SS15/5 Smoke separations
SS16 Cable cars

Additional Information to Note

1. A final inspection must have been completed prior to this application being sought.
2. The Code Compliance Certificate will be based on the approved building consent documents, so any variations to the original approved plans are required to be documented and approved prior to the work being carried out.
3. A Code Compliance Certificate will not be issued until all of the information required on this form that is relevant to the job is provided to the Council. This includes all names, certificates from personnel who carried out the work, registration numbers, producer statements, or any other required documents

Memorandum from licensed building practitioner: Record of building work

Section 88, Building Act 2004

Please fill in the form as fully and correctly as possible.

If there is insufficient room on the form for requested details, please continue on another sheet and attach the additional sheet(s) to this form.

THE BUILDING	
Street address: 4 Puketo Way.	
Suburb:	
Town/City: Amberley.	Postcode:

THE PROJECT
Building consent number: BC200465

THE OWNER(S)	
Name(s): Steven and Wendy Olliver	
Mailing address:	
Suburb:	PO Box/Private Bag:
Town/City:	Postcode:
Phone number:	Email address:

RECORD OF WORK THAT IS RESTRICTED BUILDING WORK

PRIMARY STRUCTURE

Work that is restricted building work	Description of restricted building work	Carried out or supervised
Tick ✓	If necessary, describe the restricted building work	Tick ✓ whether you carried out the restricted building work or supervised someone else carrying out the restricted building work
Foundations and subfloor framing ☐		○ Carried out ○ Supervised
Walls ☑	Installed preframed timber walls as per plan	○ Carried out ✓ Supervised
Roof ☑	Installed pre framed timber trusses as per plan	✓ Carried out ○ Supervised
Columns and beams ☑	Installed timber garage beam as per plan	○ Carried out ✓ Supervised
Bracing ☐	Installed bracing elements (fixings etc) as per plan	○ Carried out ✓ Supervised
Other ☐		○ Carried out ○ Supervised

EXTERNAL MOISTURE MANAGEMENT SYSTEMS		
Work that is restricted building work	**Description of restricted building work**	**Carried out or supervised**
Tick ✓	If necessary, describe the restricted building work	Tick ✓ whether you carried out the restricted building work or supervised someone else carrying out the restricted building work
Damp proofing ☐		○ Carried out ○ Supervised
Roof cladding or roof cladding system ☐		○ Carried out ○ Supervised
Ventilation system (for example, subfloor or cavity) ☐		○ Carried out ○ Supervised
Wall cladding or wall cladding system ☐		○ Carried out ○ Supervised
Waterproofing ☐		○ Carried out ○ Supervised
Other ☐		○ Carried out ○ Supervised

ISSUED BY

Name and contact details of the licensed building practitioner who is licensed to carry out or supervise restricted building work.

Name: Tim Hamer	LBP number: 104038
Class(es) licensed in: Carpentry	
Plumbers, Gasfitters and Drainlayers registration number (if applicable):	
Mailing address (if different from below):	
Street address/Registered office: 78 Cairnbrae Drive	
Suburb:	Town/City:
PO Box/Private Bag	Postcode:
Phone number:	Mobile: 021 749374
After hours:	Fax:
Email address: hmhamer@hotmail.co.nz	Website:

DECLARATION

I Tim Hamer carried out or supervised the restricted building work recorded on this form.

Signature: _____

Date: 16 July 2021

Memorandum from licensed building practitioner: Record of building work

Section 88, Building Act 2004

Please fill in the form as fully and correctly as possible.

If there is insufficient room on the form for requested details, please continue on another sheet and attach the additional sheet(s) to this form.

THE BUILDING	
Street address: 4 Pukeko Way	
Suburb: Amberley	
Town/City: Christchurch	Postcode:

THE PROJECT
Building consent number: BC200465A

THE OWNER(S)	
Name(s): Trident Homes Christchurch North (Oliver Residence)	
Mailing address:	
Suburb: Northwood	PO Box/Private Bag: PO Box 76178
Town/City: Christchurch	Postcode: 8548
Phone number:	Email address:

RECORD OF WORK THAT IS RESTRICTED BUILDING WORK

PRIMARY STRUCTURE

Work that is restricted building work	Description of restricted building work	Carried out or supervised
Tick ✓	If necessary, describe the restricted building work.	Tick ✓ whether you carried out the restricted building work or supervised someone else carrying out the restricted building work.
Foundations and subfloor framing ☐		○ Carried out ○ Supervised
Walls ☐		○ Carried out ○ Supervised
Roof ☐		○ Carried out ○ Supervised
Columns and beams ☐		○ Carried out ○ Supervised
Bracing ☐		○ Carried out ○ Supervised
Other ☐		○ Carried out ○ Supervised

EXTERNAL MOISTURE MANAGEMENT SYSTEMS		
Work that is restricted building work	**Description of restricted building work**	**Carried out or supervised**
Tick ✓	If necessary, describe the restricted building work.	Tick ✓ whether you carried out the restricted building work or supervised someone else carrying out the restricted building work.
Damp proofing ☐		○ Carried out ○ Supervised
Roof cladding or roof cladding system ☑	Fix self supporting roof underlay, roof cladding and flashings as per approved plans	✓ Carried out ✓ Supervised
Ventilation system (for example, subfloor or cavity) ☐		○ Carried out ○ Supervised
Wall cladding or wall cladding system ☐		○ Carried out ○ Supervised
Waterproofing ☐		○ Carried out ○ Supervised
Other ☐		○ Carried out ○ Supervised

ISSUED BY

Name and contact details of the licensed building practitioner who is licensed to carry out or supervise restricted building work.

Name: Hamish Robinson	LBP number: BP104257
Class(es) licensed in:	
R2 Roofing	
Plumbers, Gasfitters and Drainlayers registration number (if applicable):	
Mailing address (if different from below):	
Street address/Registered office: 99 Corbetts Road	
Suburb: RD7	Town/City: Christchurch
PO Box/Private Bag	Postcode:
Phone number:	Mobile: 021 165 1682
After hours:	Fax:
Email address: improve@xtra.co.nz	Website:

DECLARATION

I Hamish Robinson carried out or supervised the restricted building work recorded on this form.

Signature: [signature]

Date: 20·5·21

Building Control and City Rebuild Group

Producer statement construction (PS3)

All sections of this PS3 must be completed

Tick applicable Contractor for:

☐ Building	☐ Emergency Lighting	☒ Cladding	☐ Escalator
☐ Waterproof Membranes	☐ Drainlayer	☐ Fire Alarm	☐ Lift
☐ Mechanical (HVAC)	☐ Solar Heating	☐ Other (specify):	

Author name:
Sharon Weir

Author company:
Service Plus Install Solutions Ltd

Site address:
4 PUKEKO WAY, AMBERLEY

Description of building work:
Supply & Install of James Hardie LINEA Weather Board Cladding
Over 20 mm ventilated cavity system as per plans provided and specs in conjunction with
James Hardie Install Guide

Owners Details:
WENDY & STEVEN OLIVER

Scope of work covered by statement:
Supply & Install of James Hardie LINEA Weather Board Cladding
Over 20 mm ventilated cavity system as per plans provided and specs in conjunction with
James Hardie Install Guide

System/Product used (if applicable):
Supply & Install of James Hardie LINEA Weather Board Cladding
Over 20 mm ventilated cavity system as per plans provided and specs in conjunction with
James Hardie Install Guide

I (constructor): Service Plus Install Solutions Ltd have been engaged by

TRIDENT HOMES (applicant, designer, main contractor etc) to construct: ☐ part ☒ all

As specified in the attached particulars of Building Consent Number: BC200465 and its attached conditions and am satisfied on reasonable grounds that the building work specified above has been completed to the extent required by that Building Consent and complies with the Building Consent.

NZBC clauses:
[select as applicable]

☐ B1	☒ B2	☐ C1	☐ C2	☐ C3	☐ C4	☐ C5	☐ C6	☐ D1	☐ D2	☐ E1	☒ E2	
☐ E3	☐ F1	☐ F2	☐ F3	☐ F4	☐ F5	☐ F6	☐ F7	☐ F8	☐ G1	☐ G2	☐ G3	
☐ G4	☐ G5	☐ G6	☐ G7	☐ G8	☐ G9	☐ G10	☐ G11	☐ G12	☐ G13	☐ G14	☐ G15	
☐ H1												

I understand that this Producer Statement, if accepted, may be relied on by the Council for the purpose of establishing compliance with the Building Consent.

Registration No: Or ☒ N/A

Qualifications/Experience:

Aligned Installers for James Hardie - 4.5 years experience

Address:	Postcode:
15 Picadilly Av, Casebrook	8051

Phone:	Fax:
0274 993488	

Mobile:	Email:
0274 993488	sharon@serviceplusinstall.co.nz

Signature:	Date:
	27/7/21

Memorandum from licensed building practitioner: Record of building work

Section 88, BuildingAct 2004

Please fill in the form as fully and correctly as possible.

If there is insufficient room on the form for requested details, please continue on another sheet and attach the additional sheet(s) to this form.

THE BUILDING

Street address: 4 PUKEKO WAY	
Suburb:	
Town/City: AMBERLEY	Postcode:

THE PROJECT

Building consent number: BC200465

THE OWNER(S)

Name(s): TRIDENT HOMES	
Mailing address:	
Suburb:	PO Box/Private Bag: PO BOX 9400
Town/City: OAMARU	Postcode: 9444
Phone number:	Email address:

RECORD OF WORK THAT IS RESTRICTED BUILDING WORK

PRIMARY STRUCTURE

Work that is restricted building work	Description of restricted building work	Carried out or supervised
Tick ✓	If necessary, describe the restricted building work.	Tick whether you carried out the restricted building work or supervised someone else carrying out the restricted building work.
Foundations and subfloor framing ☐		◯ Carried out ◯ Supervised
Walls ☐		◯ Carried out ◯ Supervised
Roof ☐		◯ Carried out ◯ Supervised
Columns and beams ☐		◯ Carried out ◯ Supervised
Bracing ☐		◯ Carried out ◯ Supervised
Other ☐		◯ Carried out ◯ Supervised

EXTERNAL MOISTURE MANAGEMENT SYSTEMS		
Work that is restricted building work	**Description of restricted building work**	**Carried out or supervised**
Tick ✓	If necessary, describe the restricted building work.	Tick ✓ whether you carried out the restricted building work or supervised someone else carrying out the restricted building work.
Damp proofing ☐		◯ Carried out ◯ Supervised
Roof cladding or roof cladding system ☐		◯ Carried out ◯ Supervised
Ventilation system (for example, subfloor or cavity) ☐		◯ Carried out ◯ Supervised
Wall cladding or wallcladding system ☑		x Carried out x Supervised
Waterproofing ☐		◯ Carried out ◯ Supervised
Other ☐		◯ Carried out ◯ Supervised

ISSUED BY

Name and contact details of the licensed building practitioner who is licensed to carry out or supervise restricted building work.

Name: COREY VALE	LBP number: BP132938
Class(es) licensed in:	
Carpentry	
Plumbers, Gasfitters and Drainlayers registration number (if applicable):	
Mailing address (if different from below):	
Street address/Registered office: 42 Jelfs Rd	
Suburb: WOODEND	Town/City: WOODEND
PO Box/Private Bag	Postcode:
Phone number:	Mobile: 027 709 6740
After hours:	Fax:
Email address: CoreyVale44@gmail.com	Website:

DECLARATION

I Corey Vale carried out or supervised the restricted building work recorded on this form.

Signature: 

Date: 15/10/20

Compaction Certificate

P O Box 13, Amberley
info@hurunui.govt.nz
Fax: 03 314 9181

Site Address Lot 25 , 4 Pukeko Way , Amberley

Client Name Steven and Wendy Olliver

Building Consent Number BC 200465

Builder/Contractor Name Digout Services Ltd

Address 304 Flaxton Road

Phone Number 0212212616

LBP Number _____

This is to confirm that on the (date) 17/03/2021 , I/we have placed and compacted AP40 or _____ in layers not exceeding 150mm per layer for the floor slab and finished with 25mm sand blinding on top.

I can confirm that the compacted hard fill in this foundation has been completed to meet the New Zealand Building Standards 3604.

Signed

Kevin Williams -Director

Name

HDC Approved Consent Document (In accordance with BA 2004, Cl. 49(1)) - Processed by : Milly Perkins - BC No. 200465B

MiTek New Zealand Limited

Correspondence from : **AUCKLAND**
40 Neales Road, East Tamaki 2013
PO Box 58-014, Botany 2163
Phone: 09 274 7109
Fax: 09 274 7100

CHRISTCHURCH
14 Pilkington Way, Wigram 8042
PO Box 8387, Riccarton 8440
Phone: 03 348 8691
Fax: 03 348 0314

www.miteknz.co.nz

PRODUCER STATEMENT for MiTek 20/20® TRUSS DESIGN - Version 4.7

ISSUED BY: **MiTek New Zealand Limited**

TO: **PlaceMakers - Frame & Truss**

IN RESPECT OF: **MiTek® Truss Designs**

This producer statement covers the MiTek 20/20® truss design and the structural performance of the GANG-NAIL® connector plate for the job reference **198239A** and may be used by a Building Consent Authority to assist in determining compliance with the New Zealand Building Code.

The MiTek 20/20® truss design program has been developed by MiTek New Zealand Limited for the design of MiTek® timber roof, floor and attic trusses in New Zealand. The truss designs computed by MiTek 20/20 ® are prepared using sound and widely accepted engineering principles, and in accordance with compliance documents of the New Zealand Building Code and Verification Method B1/VM1; and internationally accepted standard ANSI/TPI 1 - 2002 as an alternative solution, to satisfy the requirements of Clause B1 of the New Zealand Building Code.

On behalf of MiTek New Zealand Limited, and subject to:

i) All proprietary products meeting their performance specification requirements
ii) The provision of adequate roof bracing and overall building stability
iii) Correct selection and placement of GANG-NAIL connector plates
iv) Correct input of Truss Design Data as shown in the Fabricator Design Statement for this job
v) The design being undertaken by the accredited fabricator under the terms of the software licence
vi) Timber is graded to the requirements of NZS 3603:1993
vii) Minimum timber treatment for these MiTek® trusses shall be in accordance with B2/AS1 Table 1A and the relevant sections of NZS 3602:2003

I believe on reasonable grounds that the trusses, if constructed in accordance with the MiTek 20/20® truss design and shop drawings, will comply with the relevant provisions of the New Zealand Building Code.

MiTek New Zealand Limited holds a current policy of Professional Indemnity Insurance no less than $500,000.

On behalf of MiTek New Zealand Limited, **Date: Thursday, 29 April 2021**

In Ling Ng, BE (Hons), CPEng, IntPE, MIPENZ (ID: 146585)
TECHNICAL SERVICES MANAGER, MiTek New Zealand Limited

HDC Approved Consent Document (In accordance with BA 2004, Cl. 49(1)) - Processed by : Milly Perkins - BC No. 200465B

PlaceMakers Know how. Can do. | FRAME & TRUSS

Amened Truss Layout

Asbuilt Layout

Roof Pitch	25.000
Roof Material	Galv Iron .5mm
TC Restraints	900
Overhang	600
Wind Zone	High
Roof Snow	0.441
BC Restraints	600
Ceiling Material	Metal battens fixed to BC

Trusses And Rafters At 900 Centres
Unless Stated Otherwise

Fixings

- = CT200 (LH & RH) Pair
- = 9kN TTP
- = 16kN TTP
- = 47x90 JH
- = 47x120 JH
- = 47x190 JH
- = 95x165 JH
- = Multigrips
- = SBS400
- = Split Hanger SP180
- = Nail On Plate

Wiredogs Fixing Per Drawing\Note Below

Please contact PlaceMakers Frame & Truss Manufacturing if any on site remedial work is required.There will be no compensation for work done without PlaceMakers Frame & Truss Manufacturing written authority.

Job No.	198239
Job Name	Trident Homes North
Address	Olliver Residence 4 Pukeko Way Amberley
Consent #	BC200465A

Drawn	Nick Bishop
Date	9 Apr,2021
Main Ph	03-359-9560
Cell Ph	0277223400
Email	nick.bishop@placemakers.co.nz

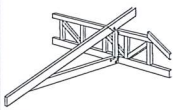

All Jack truss to truss fixings not indicated on the layout are to be fixed with a pair of 90mm nails.

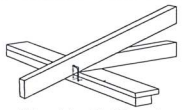

All truss to top plate fixings not indicated on the layout are to be fixed with 2/100 x 3.75 skewed nail + 2 wire dogs.

Note: Where Internal Load-Bearing Walls are shown on layout Fixings required to all Trusses.

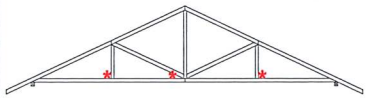

Trusses need bottom chord Restraints at
* 1800 Centres
if Rondo Metal Battern Clip System used [Not Directly Fixed]

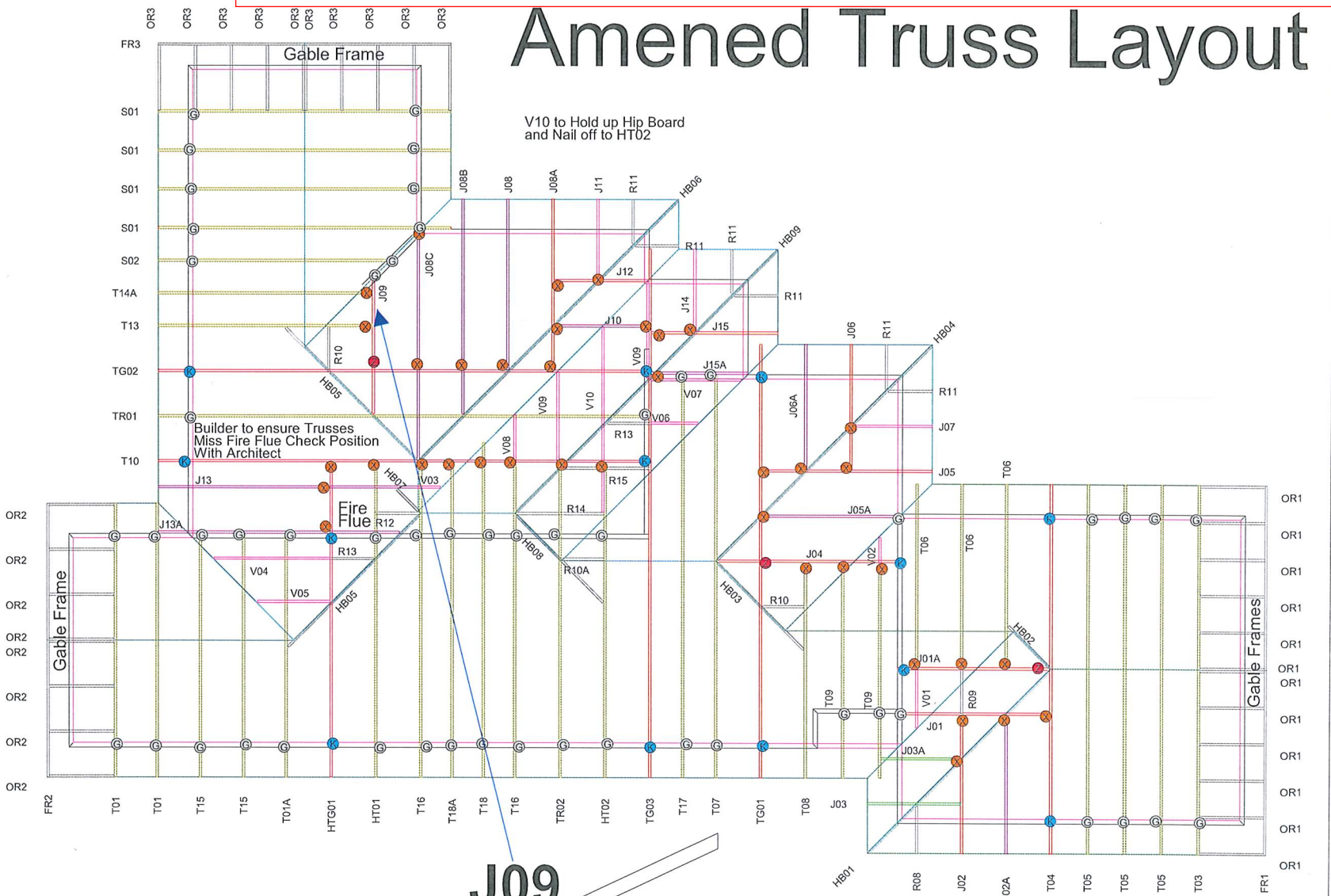

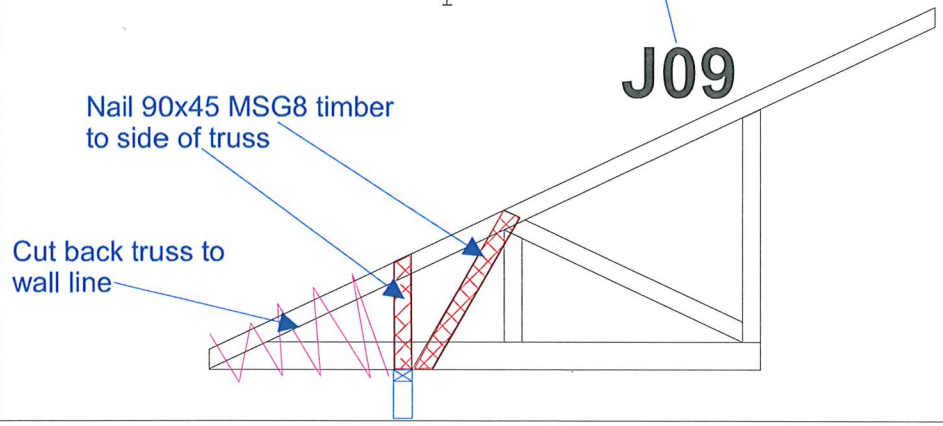

HDC Approved Consent Document (In accordance with BA 2004, Cl. 49(1)) - Processed by : Milly Perkins - BC No. 200465B

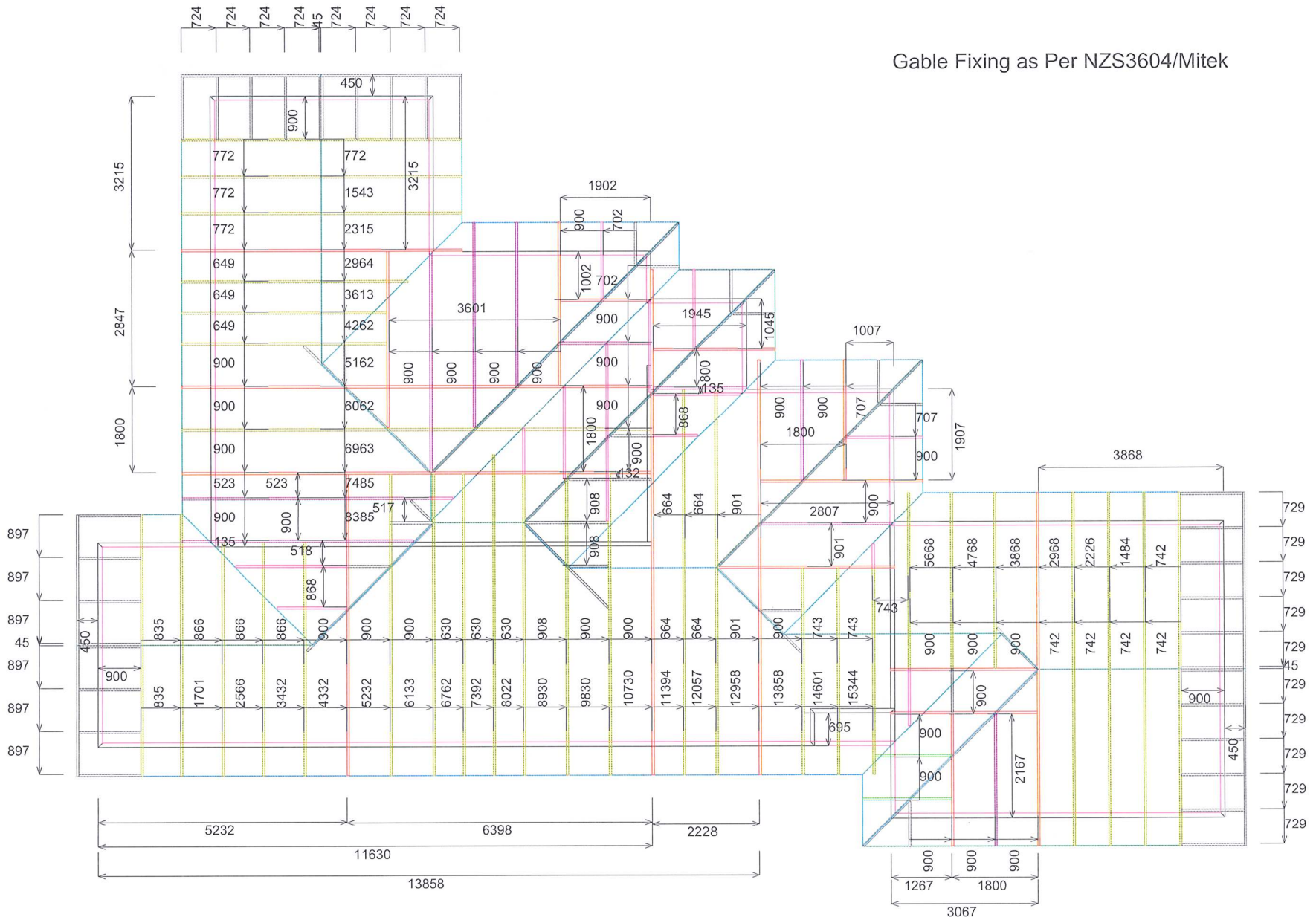
Gable Fixing as Per NZS3604/Mitek
724
724
724
724
45
724
724
724
724
450
900
772
772
772
649
649
649
900
900
900
523
900
135
772
1543
2315
2964
3613
4262
5162
6062
6963
7485
8385
3215
3215
2847
1800
517
518
868
523
1902
900
702
1002
702
900
3601
900
900
900
900
900
1945
1045
1800
135
900
868
1800
900
132
1007
900
900
707
707
1800
900
1907
3868
2807
900
664
664
901
908
908
901
5668
4768
3868
2968
2226
1484
742
729
729
729
729
729
45
729
729
729
729
729

HDC Approved Consent Document (In accordance with BA 2004, Cl. 49(1)) - Processed by : Milly Perkins - BC No. 200465B

Job: 198239A
Client: PlaceMakers Christchurch
Phone:
Site: Trident Homes North
Olliver Residence
4 Pukeko Way
Amberley
Phone:
Description:
Building Consent No.: BC200465A

MITEK FABRICATOR DESIGN STATEMENT

This statement is issued by MiTek accredited fabricator **PlaceMakers - Frame & Truss**, being licensed to use the MiTek 20/20® software, to the client listed above and may be used by the Building Consent Authority to assist in determining compliance with the New Zealand Building Code.

MiTek 20/20® TRUSS DESIGN DATA

The MiTek 20/20® computer design for this job is based on the following design parameters entered into the program. The Fabricator shall ensure that these job details are current and relevant to the project for the design of the MiTek ® trusses.

Job Details

Roof Truss

Timber Group:	Ikiop	Importance Level :	2	Design Working Life :	50 years
Roof		**Ceiling**			
Material:	Galv Iron .5mm	Material:	Metal battens fixed to BC	**Wind**	
Dead Load:	0.210 kPa	Dead Load:	0.200 kPa	Area:	High (44.0 m/s)
Restraints:	900 mm centres	Restraints:	600 mm centres	Pressure Coeff:	Cpe = varies; Cpi = -0.30, 0.20
Live Load:	Qur = 0.250 kPa Qc = 1.100 kN	Live Load:	Qc = 1.400 kN	**Snow**	
				Location:	Amberley (N4) at 100 m
				Open Ground Load:	0.900 kPa
				Basic Roof Load:	0.441 kPa

Pitch: 25.000 deg
Nominal Overhang: 600 mm

The minimum timber treatment for these MiTek® trusses shall be in accordance with B2/AS1 Table 1A and the relevant sections of NZS 3602:2003. The timber for these MiTek® trusses shall be graded to the requirements of NZS 3603:1993. Proprietary fixings and timber connectors shall be selected in accordance with NZS3604:2011 Section 4 - Durability.

MiTek® Truss List

Legend: * = detail only, ? = input only, ~~Txx~~ = failed design, Ø = non certified, Unmarked trusses = designed successfully, LB = lateral bracing required GB = gable brace required, CF = Chemical Free Treatment

Roof Truss

Treatment: Top Chords - H1.2 Bottom Chords - H1.2 Webs - H1.2

Truss	Qty	Span (mm)	Pitch (deg)	Spacing (mm)
S01	4	4680	25.000	900
S02	1	4121	25.000	900
*T02	1	4500	10.000	900

Roof Truss quantity : 6

Total quantity : 6

The computer design input has been carried out by:

Signed: .....

Date: ...Thursday, 29 April 2021....

Name of Detailer: Mark Strawbridge

Qualifications and Title: Detailer

On behalf of: **PlaceMakers - Frame & Truss**

PlaceMakers® Know how. Can do. FRAME & TRUSS

PIPE
DRAINAGE LTD
D.WILLIAMS
REGO NO.18538

#1414

082073

DATE- 14/4/21
ADDRESS 4 Pukeko Way Amberley.
BCN# 2004654
GRADES- sewer 1:100, stormwater 1:90-1:100

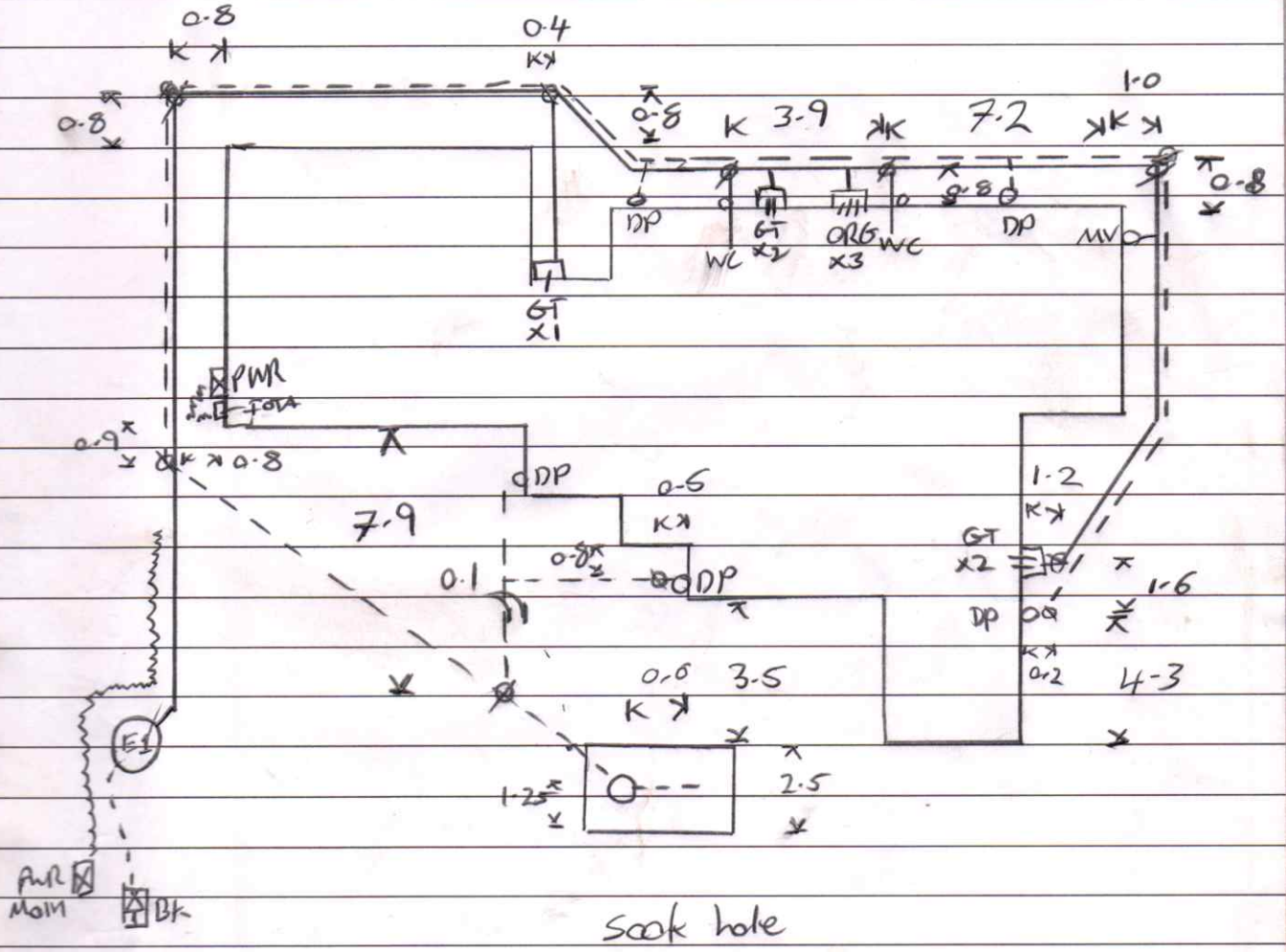

Soak hole
2.5w, 3.0L
2.0 Deep

Producer Statement Construction PS3

Drainlaying Contractor

Issued by: **Pipe Rite Drainage Ltd** To: **Hurunui District Council**

SECTION 1: OWNER

Owner: **Trident Homes Ltd**

Project Address: **Lot 25, 4 Pukeko Way, Amberley**

Description of Building Work: **Connect sewer to Eone pump chamber then to existing lateral and connect stormwater to soakhole as per consented design &/or engineer design.**

Scope of work covered by statement: **Connect sewer to Eone pump chamber then to existing lateral and connect stormwater to soakhole for a new dwelling as per the building code. Eone pump chamber installed as per manufacturers instructions. Soakhole installed to engineer design &/or directive.**

I (Constructor): **Pipe Rite Drainage Ltd** have been engaged by **Trident Homes Ltd** (building consent applicant) to construct: ☐ All ☐ Part only

As specified in the attached particulars of Building Consent Number: **200465** and its attached conditions and am satisfied on reasonable grounds that the building work specified above has been completed to the extent required by that Building Consent and complies with the Building Consent.

Specific reference to the Building Code:

What clauses of the Building Code are covered by the Producer Statement? (Circle applicable clauses)

81	82	C1	C2	C3	C4	C5	C6	01	02
(E1)	E2	E3	F1	F2	F3	F4	F5	F6	F7
F8	G1	G2	G3	G4	G5	G6	G7	GB	G9
G10	G11	G12	(G13)	G 14	G15	H1			

I understand that this Producer Statement, if accepted will be relied upon by Hurunui District Council for the purpose of establishing compliance with the Building Consent.

1x soak hole

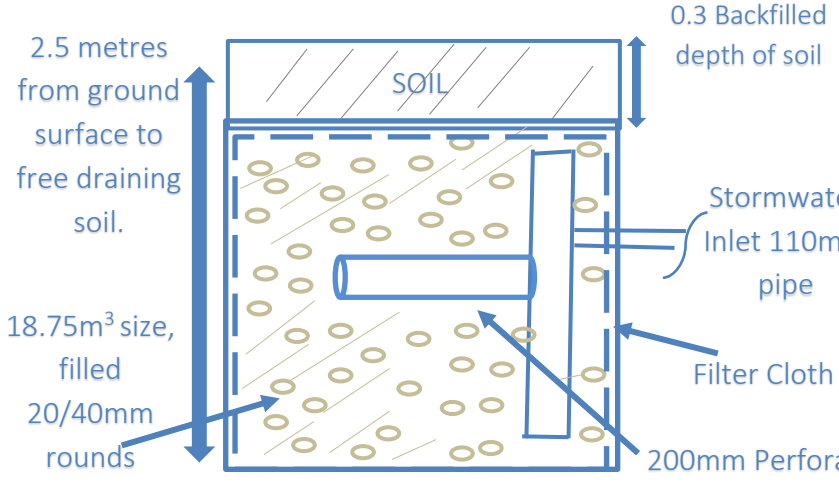

Notes:

Soakage achieved at 2.5m deep into free draining shingle.

Loaded hole with 20 litres of water drained away in less than 40 seconds, this was repeated 3 times.

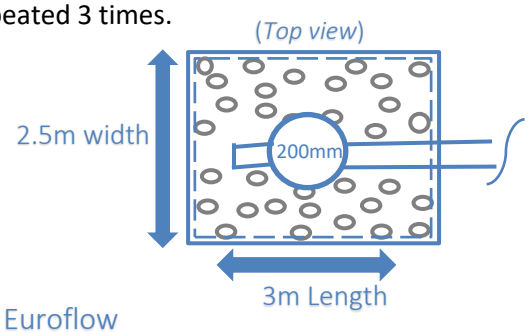

SECTION 2: CONSTRUCTOR'S DETAILS

Name: **Danniell Williams** Registration Number: **18538**

Qualifications / Experience: **Certifying Drainlayer - Trading since July 2002**

Address: **83 Youngs Rd, RD1 Kaiapoi 7691**

Phone Number: **021 229 3015**

Email: **office@piperite.co.nz**

Signature:

Date: **April 22, 2021**

Producer statement construction (PS3)

All sections of this PS3 must be completed

Tick applicable Contractor for:

☐ Building	☐ Emergency Lighting	☐ Cladding	☐ Escalator
☒ Waterproof Membranes	☐ Drain layer	☐ Fire Alarm	☐ Lift
☐ Mechanical (HVAC)	☐ Solar Heating	☐ Other (specify):	

Author name:
Daniel O'Neill

Author company:
Total Tile Installation Limited

Site address:
Lot 25, 4 Pukeko Way, Amberley

Description of building work:
Waterproof membrane to bath surround only.

Owners Details:
Steven Lloyd Olliver, Wendy Joy Anne Olliver

Scope of work covered by statement:

System/Product used (if applicable):
Mapei Aqua defense

I Total Tile Installation Ltd. have been engaged by NM Build Ltd

part ☒ all ☐

As specified in the attached particulars of Building Consent Number: BC200465 and its attached conditions and am satisfied on reasonable grounds that the building work specified above has been completed to the extent required by that Building Consent and complies with the Building Consent.

NZBC clauses:
[select as applicable]

☐ B1	☐ B2	☐ C1	☐ C2	☐ C3	☐ C4	☐ C5	☐ C6	☐ D1	☐ D2	☐ E1	☐ E2
☒ E3	☐ F1	☐ F2	☐ F3	☐ F4	☐ F5	☐ F6	☐ F7	☐ F8	☐ G1	☐ G2	☐ G3
☐ G4	☐ G5	☐ G6	☐ G7	☐ G8	☐ G9	☐ G10	☐ G11	☐ G12	☐ G13	☐ G14	☐ G15
☐ H1											

I understand that this Producer Statement, if accepted, may be relied on by the Council for the purpose of establishing compliance with the Building Consent.

Registration No: Or ☐ N/A

MPNZ 1283

Qualifications/Experience:

MAPEI WET AREA APPROVED APPLICATOR

Address:	Postcode:
Rata Street, Rangiora	7400

Phone:	Fax:

Mobile:	Email:
02 21272 502	ttinstallation@gmail.com

Signature:	Date:
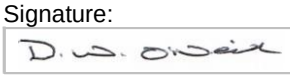	28.07.2021

HURUNUI DISTRICT COUNCIL
P.O. Box 13 | Amberley | 7441 | 66 Carters Road | Amberley | 7410
Phone 03 314-0006 | Fax 03 314-9181 | Email info@hurunui.govt.nz
Web hurunui.govt.nz | facebook.com/HurunuiDistrictCouncil
Skype hdc_customer_services | twitter.com/hurunuidc

Certification

Plumbing

Issued by (plumber) : Joseph Harris

(To Hurunui District Council)

OWNER'S DETAILS	
Owner's name :	Steven and Wendy Olliver
Project address :	Lot 25, 4 Pukeko Way Amberley
Building consent number :	**BC200465**
Description of building work :	New Plumbing - residential dwelling

I (plumber) Signature Plumbing Ltd

have been engaged by Trident Homes Christchurch North (building consent applicant)

to undertake the plumbing work on the above building consent.

I hereby certify that hot and cold water pipes have been pressure tested to 1500kPa for a period of not less than 15 minutes without pressure drop complying with NZ Building Code G12/AS1 clause 7.5.1

I understand that this certificate, if accepted, will be relied upon by Hurunui District Council for the purpose of establishing compliance with the Building Consent.

PLUMBER'S DETAILS			
Plumber's name :	Signature Plumbing Ltd		
Address :	143 Mandeville Road RD2 Kaiapoi		
Registration number :	16161	Mobile phone :	027 451 4436
Phone (work) :	027 451 4436	E-mail address :	signatureplumbing@xtra.co.nz
Signature :		Date :	2/8/2021

GASFITTING CERTIFICATE OF COMPLIANCE – GAS SAFETY CERTIFICATE

Certificate of Compliance:

Client Name: Stephen and Wendy Olliver

Reference / Job #: 060056-325.1 **ICP (if known):**

Address of work: 4 Pukeko Way

Suburb: **Town / City:** Amberley

Description of gasfitting work: (If different gasfitting work was done by different people, state who did what gasfitting.)

Installed Rinnai A26 Water Heater
Installed 8kg Changeover Regulator
Certify
Installed Fisher & Paykel Gas Hob
Installed Gas Pipe and Fittings

Gas supply pressure 3 kPa **Risk classification** (tick one) ☐ Low-Risk ■ General ☐ High-risk

Gas type (tick one) ☐ Natural gas ■ LPG ☐ Biogas ☐ Other (specify)

The work has been done in accordance with a certified design: ☐ Yes ■ No

If yes – identify the certified design including name, date and version. Also attach a copy of the certified design to this certificate.
(Or provide reference to readily accessible electronic format, eg Internet link.)

Identify:
Link:

The work relies on manufacturer's instructions: ■ No ☐ Yes:

If yes – identify the instruction manual including name, date and version. Also attach a copy of manufacturer's instructions to this certificate.
(Or provide reference to readily accessible electronic format, eg Internet link.)

Identify:
Link:

The work has been done in accordance with means of compliance (specify):

■ Yes – AS/NZS 5601.1 sections 3 to 6 ☐ Yes – AS/NZS 5601.2 sections 3 to 9 ☐ No

Were any other standards or gas code of practice required for compliance?

☐ Yes (specify) ■ No

Parts of the gas installation to which this certificate relates that are safe to connect to a gas supply?

■ All ☐ Parts (specify)

Date(s) on which the work was done: 27th July 2021

Name and registration number of anyone who carried out work under supervision: -

By signing this document I confirm that I am satisfied that the work described in this certificate of compliance has been done lawfully and safely, and that the information on this certificate is correct.

Certifier name: Nathan Shadforth **Registration number:** 21905

Certifier Signature: **Date:** 27.07.2021

Gas Safety Certificate:

By signing this document I confirm that the work described in this Gas Safety Certificate, and the installation or part installation, is connected to a gas supply and is safe to use.

Name of person authorised to certify the connection: Nathan Shadforth

Registration number: 21905 **Date of completion or connection** 27.07.2021

Certifier Signature: **Date:** 27.07.2021

This Gas Safety Certificate confirms that the gasfitting work complies with the building code for the purposes of Section 19(1)(e) of the Building Act 2004.

ELECTRICAL CERTIFICATE OF COMPLIANCE & ELECTRICAL SAFETY CERTIFICATE

REFERENCE/CERTIFICATE ID NO.: 16779

This form has been designed to be used by licensed electrical workers to certify that installations or Part installations under **Part 1 or Part 2 of AS/NZS 3000** are safe to be connected to the **specified** system of electrical supply.

Location Details: 4 Pukeko Way, Amberley

Contact Details: (Name and address) NM Build t/a Triden Homes - 06admin@tridenthomes.nz

Name of Electrical worker: Chris Lavelle

Registration/Practising licence number: LMD 271 473

Phone & email: operations@telpower.co.nz 033394150

Name and registration number of person(s) supervised:

Certificate of Compliance

Type of work: ☐ Addition ☐ Alteration ■ New work

The prescribed electrical work is: ☐ Low risk ☐ General ■ High-risk (Specify):

Means of compliance: ☐ Part 1 of AS/NZS 3000 ■ Part 2 of AS/NZS 3000

Additional Standards or electrical code of practice were required: ■ No ☐ Yes (specify):

Date or range of dates that prescribed electrical work undertaken: 6/09/2019

Contains fittings that are safe to connect to a power supply? ☐ Yes ☐ No

Specify type of supply system:

The installation has an earthing system that is correctly rated (where applicable) ■ Yes ☐ No

Parts of the installation to which this certificate relates that are safe to connect to a power supply?

☐ All ☐ Parts (specify)

The work relies on manufacturers instructions: ☐ Yes ■ No

If yes – identify the instruction manual including name, date and version. Also attach a copy of manufacturer's instructions to this certificate.
(Or provide reference to readily accessible electronic format, eg Internet link.)

Identify:
Link:

The work has been done in accordance with a certified design: ☐ Yes ■ No

If yes – identify the certified design including name, date and version. Also attach a copy of the certified design to this certificate.
(Or provide reference to readily accessible electronic format, eg Internet link.)

Identify:
Link:

The work relies on a Supplier Declaration of Conformity (SDoC): ☐ Yes ■ No

If yes - identify the SDoC including name, date and version OR EESS registration. Also attach a copy of the SDoC to this certificate.
(Or provide reference to readily accessible electronic format, eg Internet link.)

Identify:
Link:

The installation has been satisfactorily tested in accordance with the Electricity (Safety) Regulations 2010 ☐ No ■ Yes

Description of Work:

Trenched and installed 16mm 3-phase NS mains cable

1000m Ohms per phase

Test Results (provide values)		
Polarity (Independent earth):		
Insulation resistance:	1000m	Ohms
Earth Continuity:		Ohms
Bonding:		Ohms
Fault Loop impedance		Ohms
Other (specify):		

By signing this document I certify that the completed prescribed electrical work to which this Certificate of Compliance applies has been done lawfully and safely, and the information in the certificate is correct.

Certifier's signature: **Date:** 28/06/2021

Electrical Safety Certificate

By signing this document I certify that the installation, or part of the installation, to which this Electrical Safety Certificate applies is connected to a power supply and is safe to use.

Certifier's name: **Registration/Practising licence number:**

Certifier's signature: **Certificate Issue Date:** **Connection Date:**

CUSTOMER COPY – THIS IS AN IMPORTANT DOCUMENT AND SHOULD BE RETAINED FOR A MINIMUM OF 7 YEARS

This Electrical Safety Certificate also confirms that the electrical work complies with the building code for the purposes of Section 19(1)(e) of the Building Act 2004.

ELECTRICAL CERTIFICATE OF COMPLIANCE & ELECTRICAL SAFETY CERTIFICATE

REFERENCE/CERTIFICATE ID NO.: 16707

This form has been designed to be used by licensed electrical workers to certify that installations or Part installations under **Part 1 or Part 2 of AS/NZS 3000** are safe to be connected to the **specified** system of electrical supply.

Location Details: 4 Pukeko Way, Amberley

Contact Details: (Name and address) N M Build t/a Trident Homes: 06admin@tridenthomes.nz

Name of Electrical worker: Chris Lavelle

Registration/Practising licence number: LMD271473

Phone & email: operations@telpower.co.nz 033394150

Name and registration number of person(s) supervised:

Certificate of Compliance

Type of work: ☐ Addition ☐ Alteration ☐ New work

The prescribed electrical work is: ☐ Low risk ■ General ■ High-risk (Specify):

Means of compliance: ☐ Part 1 of AS/NZS 3000 ■ Part 2 of AS/NZS 3000

Additional Standards or electrical code of practice were required: ■ No ☐ Yes (specify):

Date or range of dates that prescribed electrical work undertaken: 6/09/2019

Contains fittings that are safe to connect to a power supply? ☐ Yes ☐ No

Specify type of supply system:

The installation has an earthing system that is correctly rated (where applicable) ■ Yes ☐ No

Parts of the installation to which this certificate relates that are safe to connect to a power supply?

☐ All ☐ Parts (specify)

The work relies on manufacturers instructions: ☐ Yes ■ No

If yes – identify the instruction manual including name, date and version. Also attach a copy of manufacturer's instructions to this certificate.
(Or provide reference to readily accessible electronic format, eg Internet link.)

Identify:
Link:

The work has been done in accordance with a certified design: ☐ Yes ■ No

If yes – identify the certified design including name, date and version. Also attach a copy of the certified design to this certificate.
(Or provide reference to readily accessible electronic format, eg Internet link.)

Identify:
Link:

The work relies on a Supplier Declaration of Conformity (SDoC): ☐ Yes ■ No

If yes - identify the SDoC including name, date and version OR EESS registration. Also attach a copy of the SDoC to this certificate.
(Or provide reference to readily accessible electronic format, eg Internet link.)

Identify:
Link:

The installation has been satisfactorily tested in accordance with the Electricity (Safety) Regulations 2010 ☐ No ■ Yes

Description of Work:

Installed 16mm 1-Phase NS mains + bare earth in an open trench

Test Results (provide values)		
Polarity (Independent earth):		
Insulation resistance:	1000M	Ohms
Earth Continuity:		Ohms
Bonding:		Ohms
Fault Loop impedance		Ohms
Other (specify):		

By signing this document I certify that the completed prescribed electrical work to which this Certificate of Compliance applies has been done lawfully and safely, and the information in the certificate is correct.

Certifier's signature: **Date:** 16/04/2021

Electrical Safety Certificate

By signing this document I certify that the installation, or part of the installation, to which this Electrical Safety Certificate applies is connected to a power supply and is safe to use.

Certifier's name: **Registration/Practising licence number:**

Certifier's signature: **Certificate Issue Date:** **Connection Date:**

CUSTOMER COPY – THIS IS AN IMPORTANT DOCUMENT AND SHOULD BE RETAINED FOR A MINIMUM OF 7 YEARS

This Electrical Safety Certificate also confirms that the electrical work complies with the building code for the purposes of Section 19(1)(e) of the Building Act 2004.

ELECTRICAL CERTIFICATE OF COMPLIANCE & ELECTRICAL SAFETY CERTIFICATE

REFERENCE/CERTIFICATE ID NO.: #7313C2

This form has been designed to be used by licensed electrical workers to certify that installations or Part installations under **Part 1 or Part 2 of AS/NZS 3000** are safe to be connected to the **specified** system of electrical supply.

Location Details: 4 Pukeko Way Lot 25, Amberley, 7410

Contact Details: (Name and address) Greg Lyon glyon@tridenthomes.nz, 027 542 1944

Name of Electrical worker: Dom Farquhar

Registration/Practising licence number: E267187

Phone & email: dom.ezibreeze@gmail.com, 0273451405

Name and registration number of person(s) supervised: Brodie Terris

Certificate of Compliance

Type of work: ☐ Addition ☐ Alteration ☑ New work

The prescribed electrical work is: ☐ Low risk ☑ General ☐ High-risk (Specify):

Means of compliance: ☐ Part 1 of AS/NZS 3000 ☑ Part 2 of AS/NZS 3000

Additional Standards or electrical code of practice were required: ☑ No ☐ Yes (specify):

Date or range of dates that prescribed electrical work undertaken: 19/7/2021 to 29/7/2021

Contains fittings that are safe to connect to a power supply? ☑ Yes ☐ No

Specify type of supply system: 230V single phase MEN

The installation has an earthing system that is correctly rated (where applicable) ☑ Yes ☐ No

Parts of the installation to which this certificate relates that are safe to connect to a power supply?

☑ All ☐ Parts (specify)

The work relies on manufacturers instructions: ☐ Yes ☑ No

If yes – identify the instruction manual including name, date and version. Also attach a copy of manufacturer's instructions to this certificate.
(Or provide reference to readily accessible electronic format, eg Internet link.)

Identify:
Link:

The work has been done in accordance with a certified design: ☐ Yes ☑ No

If yes – identify the certified design including name, date and version. Also attach a copy of the certified design to this certificate.
(Or provide reference to readily accessible electronic format, eg Internet link.)

Identify:
Link:

The work relies on a Supplier Declaration of Conformity (SDoC): ☑ Yes ☐ No

If yes - identify the SDoC including name, date and version OR EESS registration. Also attach a copy of the SDoC to this certificate.
(Or provide reference to readily accessible electronic format, eg Internet link.)

Identify: Radcliffe electrical Rangiora
Link: Www.jrrussel.co.nz

The installation has been satisfactorily tested in accordance with the Electricity (Safety) Regulations 2010 ☐ No ☑ Yes

Description of Work:
New house installation, as per plan and components list

Test Results (provide values)		
Polarity (Independent earth):	Correct	
Insulation resistance:	999Mohms	Ohms
Earth Continuity:	0.1	Ohms
Bonding:	0.1	Ohms
Fault Loop impedance	0.54	Ohms
Other (specify):		

By signing this document I certify that the completed prescribed electrical work to which this Certificate of Compliance applies has been done lawfully and safely, and the information in the certificate is correct.

Certifier's signature: 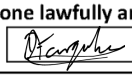 **Date:** 29/7/2021

Electrical Safety Certificate

By signing this document I certify that the installation, or part of the installation, to which this Electrical Safety Certificate applies is connected to a power supply and is safe to use.

Certifier's name: Dom Farquhar

Registration/Practising licence number: E267187

Certifier's signature: 

Certificate Issue Date: 29/7/2021

Connection Date: 29/7/2021

CUSTOMER COPY – THIS IS AN IMPORTANT DOCUMENT AND SHOULD BE RETAINED FOR A MINIMUM OF 7 YEARS

This Electrical Safety Certificate also confirms that the electrical work complies with the building code for the purposes of Section 19(1)(e) of the Building Act 2004.

Powered by Fergus

4 Pukeko Way, Amberley

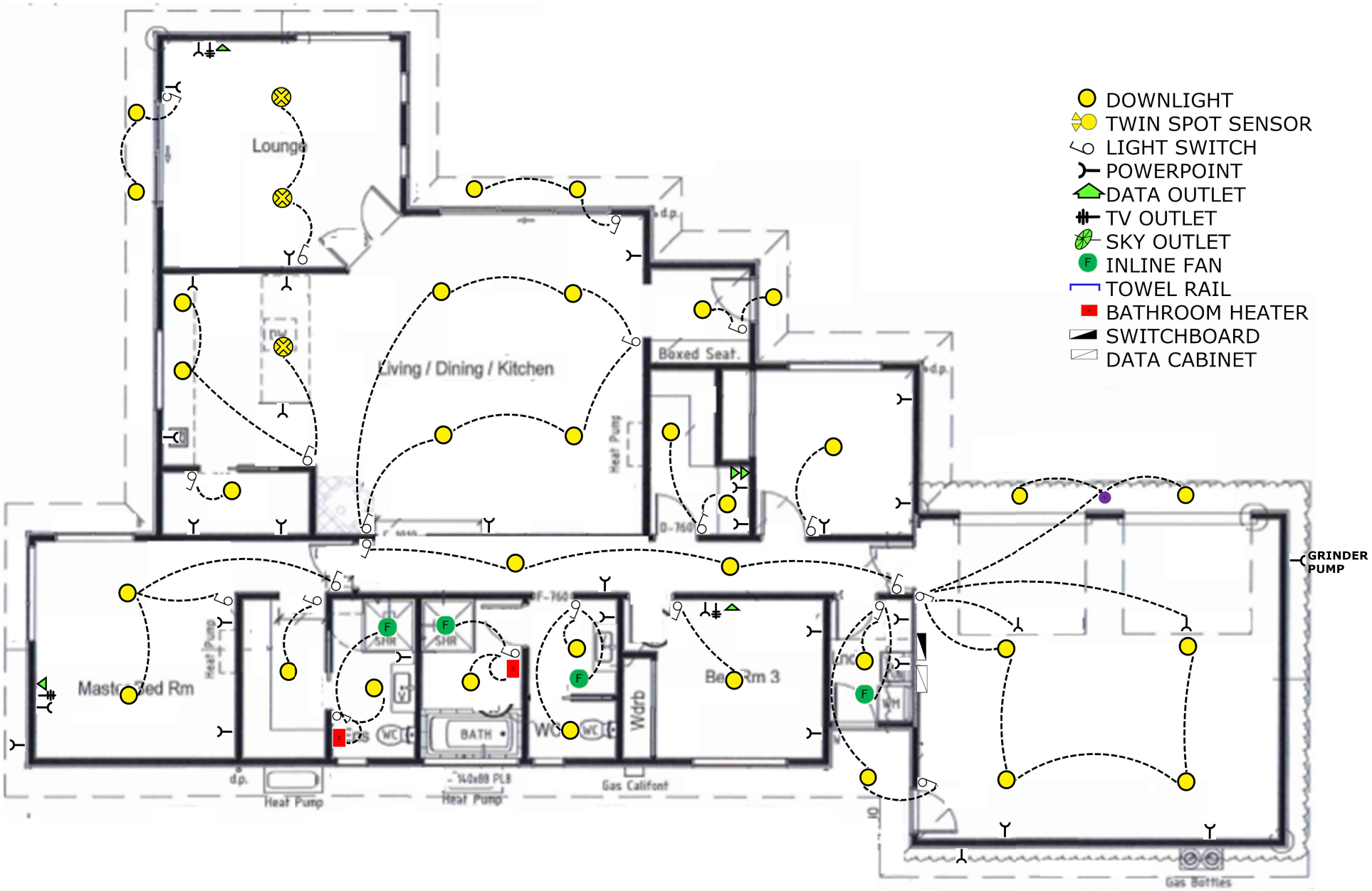

Ezi-Breeze Ltd
98 Boundary Road RD 5, Rangiora, 7475
info@ezibreeze.co.nz
03 3522780

Electrical Component List

ELECTRICAL COMPONENT LIST (ADDITION TO COC)

LOCATION DETAILS

4 Pukeko Way Lot 25, Amberley, 7410

COC NUMBER

#7313

DATE

07/29/2021

DESCRIPTION/NUMBER OF FITTING IN INSTALLATION

DOWNLIGHTS

34

PENDANT LIGHTS

3

OTHER LIGHTS (INTERNAL)

3

EXTERNAL LIGHTS

SENSOR LIGHTS

SENSORS

2

POWER OUTLETS

33

DATA OUTLETS

TV OUTLETS

LIGHT SWITCHES

20

INLINE FANS

4

SMOKE DETECTORS

2

WATER HEATING

- [ ] HWC
- [x] GAS

NUMBER OF BATHROOM HEATERS

2

TOWEL RAILS

TOWEL RAIL (MODEL AND WHO SUPPLIED)

BATHROOM HEATERS (MODEL AND WHO SUPPLIED)

Serene 2068 owner supplied

TYPE AND SIZE OF SWITCHBOARD

Vinco sb/meter box

HOB, BRAND & MODEL

OVEN, BRAND & MODEL

Fisher and paykel

EXTERNAL LIGHTS (MODEL/TYPE AND WHO SUPPLIED)

ALARM

- [ ] YES
- [x] NO

NUMBER OF ALARM SENSORS

- [x] WIFI ADDITION

UNDERTILE HEATING (PLACEMENTS/SIZE)

HEATPUMP POSITION AND MODEL

As71 in living and tcl370113 in the bedroom

ANY OTHER COMMENTS ADDITIONS

25 November 2020

Hurunui District Council
66 Carters Road
Amberley 7410

Dear Sir/Madam,

Re: Construction of Dwelling at: Lot 25, 4 Pukeko Way, Amberley
Job No. 060056

Please direct all correspondence relating to the construction of the abovementioned dwelling, to our builder N M Build Ltd Franchisee for Trident Homes Christchurch North, 756 Main North Road, PO Box 76 178, Christchurch 8051.

Yours faithfully

.....

Steven Lloyd Olliver and Wendy Joy Anne Olliver

/ / 2020

RECORD OF TITLE
UNDER LAND TRANSFER ACT 2017
FREEHOLD
Search Copy

R.W. Muir
Registrar-General
of Land

Identifier 713226
Land Registration District Canterbury
Date Issued 19 February 2016

Prior References
95082

Estate	Fee Simple
Area	2246 square metres more or less
Legal Description	Lot 25 Deposited Plan 488914

Registered Owners
Steven Lloyd Olliver and Wendy Joy Anne Olliver

Interests

10237191.1 Consent Notice pursuant to Section 221 Resource Management Act 1991 - 19.2.2016 at 9:47 am

Subject to a right of way and a right to convey water, electricity, telecommunications and computer media and a right to drain water and sewage over part marked P on DP 488914 created by Easement Instrument 10237191.4 - 19.2.2016 at 9:47 am

Appurtenant hereto is a right of way and a right to convey water, electricity, telecommunications and computer media and a right to drain water and sewage created by Easement Instrument 10237191.4 - 19.2.2016 at 9:47 am

The easements created by Easement Instrument 10237191.4 are subject to Section 243 (a) Resource Management Act 1991

Subject to a right to convey telecommunications and computer media (in gross) over part marked P on DP 488914 in favour of Chorus New Zealand Limited created by Easement Instrument 10237191.5 - 19.2.2016 at 9:47 am

The easements created by Easement Instrument 10237191.5 are subject to Section 243 (a) Resource Management Act 1991

Subject to a right to convey electricity (in gross) over part marked P on DP 488914 in favour of MainPower New Zealand Limited created by Easement Instrument 10237191.6 - 19.2.2016 at 9:47 am

The easements created by Easement Instrument 10237191.6 are subject to Section 243 (a) Resource Management Act 1991

Subject to a right to convey water and to drain sewage (in gross) over part marked P on DP 488914 in favour of the Hurunui District Council created by Easement Instrument 10237191.7 - 19.2.2016 at 9:47 am

The easements created by Easement Instrument 10237191.7 are subject to Section 243 (a) Resource Management Act 1991

Land Covenant in Easement Instrument 10237191.8 - 19.2.2016 at 9:47 am (Limited as to Duration)

11830264.2 Mortgage to Bank of New Zealand - 28.8.2020 at 10:32 am

HURUNUI DISTRICT COUNCIL
P.O. Box 13 | Amberley | 7441 | 66 Carters Road | Amberley | 7410
Phone 03 314-8816 | Fax 03 314-9181 | Email info@hurunui.govt.nz
Web hurunui.govt.nz | facebook.com/HurunuiDistrictCouncil
Skype hdc_customer_services | twitter.com/hurunuidc

9 December 2020

19 South Crescent,
RD 1
Amberley 7481

Dear Steven and Wendy,

BUILDING CONSENT BC200465 - VEHICLE CROSSING CONSTRUCTION

Please note that in order to promote the safe and efficient use and development of the transportation network, the District Plan has rules for vehicle access onto properties. No activity, including the construction of a dwellinghouse, can be commenced unless the property is provided with adequate site access in terms of Rule 8.4.3 of the Hurunui District Plan. In this case the specifications of the vehicle crossing are conditioned by Consent Notice registered to the Certificate of Title. The Consent Notice requires the new vehicle crossing to be formed in accordance with DD-01 Vehicle Crossing Details ''Crossing type B''.

In order for the Council to allow the building work to proceed, you have three options as follows:

1. Construct the vehicle crossing in accordance with the requirements of the Consent Notice before the Council will allow the building work to proceed. This will require you to contact the Council prior to construction commencing to arrange the required inspections. Confirmation that the vehicle crossing meets the design and construction standards of the Consent Notice will be discussed with the Consents Engineer at your pre-construction meeting. Please find attached the relevant design and construction requirements of the Consent Notice.

2. Enter into a cash bond agreement with the Council to secure compliance with the vehicle crossing standards of the Consent Notice. Once the bond agreement has been entered into, and the Council has issued the building consent, the building works may proceed. Please find attached a copy of the bond documents should you choose to enter into the bond agreement with the Council. Please complete two copies and return one copy to the Council with **$3025**. The cash bond includes a non-refundable fee of $525 for administration and inspections.

   The construction of the vehicle crossing shall be undertaken within 12 months of the bond being entered into or before the use of the proposed activity commences, whichever is the lesser. Should you complete the work in accordance with the Consent Notice, then the cash bond will be refunded less the administration and inspections fee.

3. Do nothing, in which case a certificate under section 37 of the Building Act will be attached to the Building Consent. This will require you to apply for resource consent to defer the construction of the vehicle crossing to a specified date. A resource consent application has a flat fee of $1,045.00. No building work may proceed until resource consent has been granted.

Please advise the Council at your earliest convenience as to how you wish to proceed.

Please do not hesitate to contact me should you wish to discuss the options available to you in further detail.

Yours faithfully



Hannah Shields
Planner

Encl.
Attachment 1: Vehicle crossing design and construction standards
Attachment 2: Bond documentation

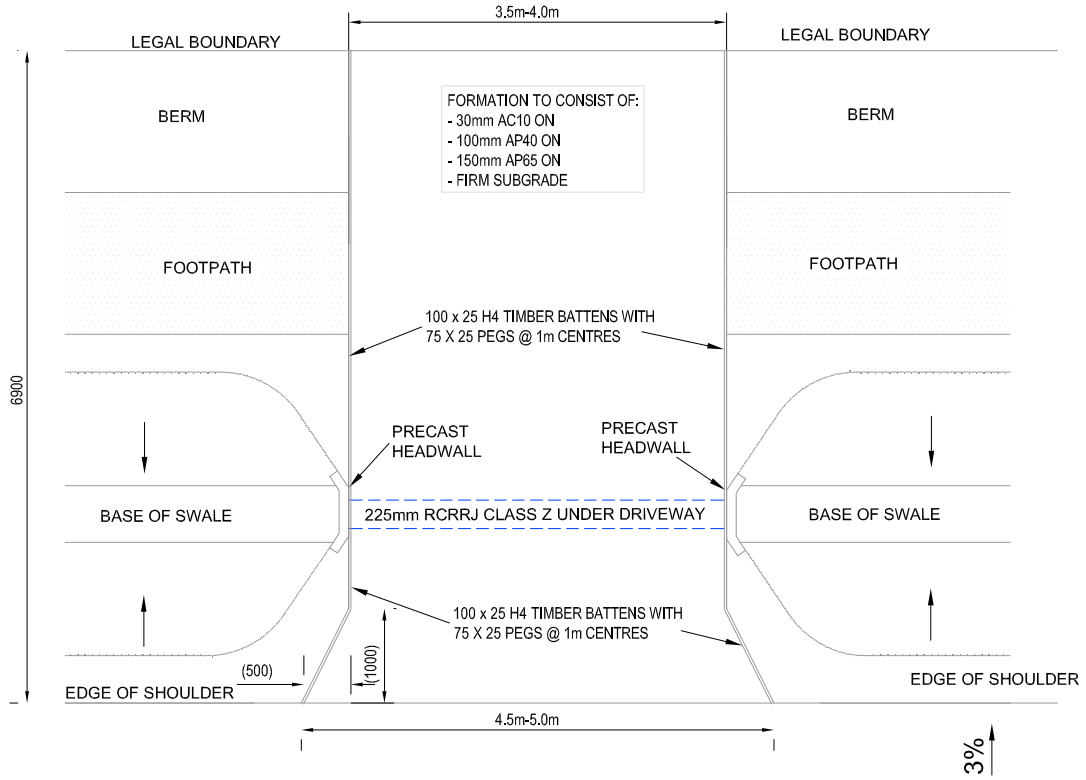

TYPICAL DRIVEWAY "A" PLAN

SCALE 1:40

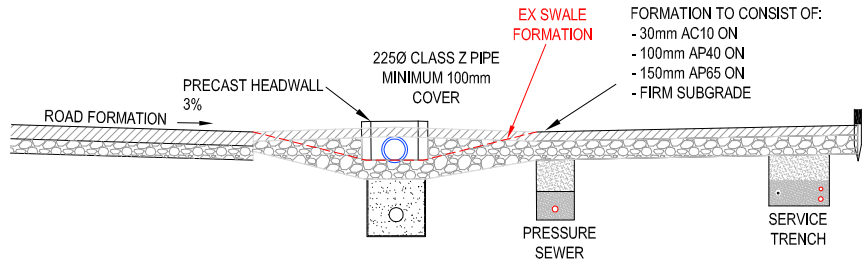

TYPICAL DRIVEWAY "A" SECTION

SCALE 1:40

Scheme Plan
Approved
14 Oct 2015
RC # :
150161
By : Sean
Crocker

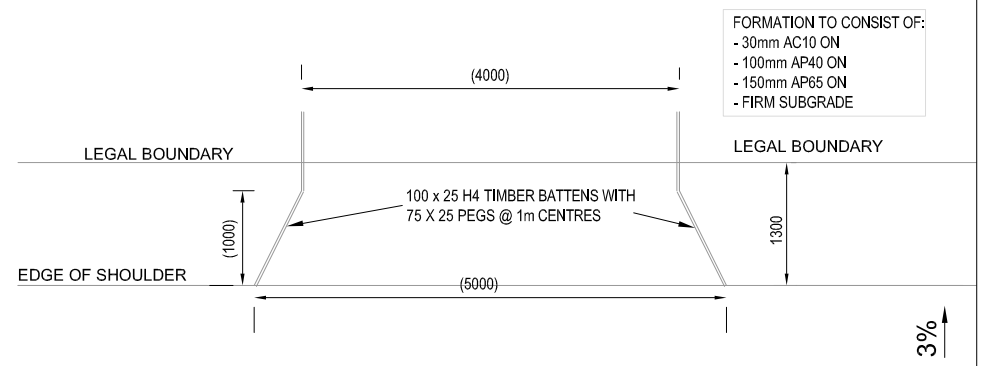

TYPICAL DRIVEWAY "C" PLAN (NO SWALE)

SCALE 1:40

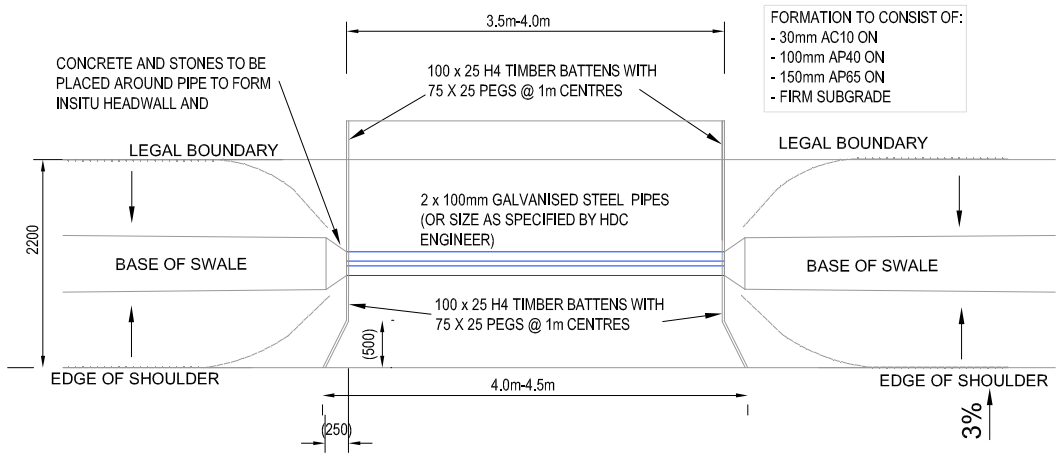

TYPICAL DRIVEWAY "B" PLAN

SCALE 1:40

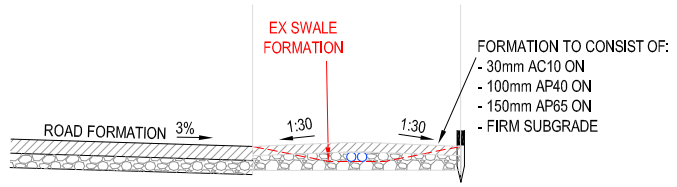

TYPICAL DRIVEWAY "B" SECTION

SCALE 1:40

SURVUS CONSULTANTS
surveying engineering property development
WWW.SURVUS.CO.NZ

4 Meadow Street, PO Box 5558, Papanui, Christchurch
P 03 352 5599 AMBERLEY 03 314 9200
F 03 352 5527 ASHBURTON 03 307 7021
TOLL FREE 0508 787 887 DARFIELD 03 318 8151

REV	DATE	REVISION DETAILS	
2	28/08/15	UPDATED DRIVEWAY B	C HURFORD
1	06/08/15	FOR CONSTRUCTION	C HURFORD
A	04/08/15	FOR CONSENT	C HURFORD

DESIGNED	VERIFIED
CWH	JC

APPROVED

C HURFORD DATE *04/08/15*

C HURFORD

PROJECT

LMM INVESTMENTS 2012 LIMITED - 57 DOUBLE CORNER ROAD

TITLE

VEHICLE CROSSING DETAILS

FOR CONSTRUCTION

PROJECT NO 11713

SCALE AS SHOWN | SIZE A1

DRAWING NO DD-01 | REV 2

Attachment 2: Bond documentation

ACCESSWAY CONSTRUCTION BOND
BUILDING CONSENT BC200465

BY THIS BOND made the _____ day of _____ 2020

BETWEEN the Hurunui District Council (called "the Council") of the one part

AND Steven and Wendy Olliver (the "Owner(s)") 4 Pukeko Way, Amberley (with his/her/their successors and assigns called "the Owner(s)")

BACKGROUND:

A. The Owner(s) wishes to undertake building works on the property situated at 4 Pukeko Way, Amberley, legal description – Lot 25 DP 488914 (hereinafter called "the Land").

B. The Council's District Plan for the Land provides that the creation of any new vehicle crossing, or the use of an existing vehicle crossing for a new activity, (including the relocation of such) shall meet the standards of Rule 8.4.2 of the Hurunui District Plan. In this instance the vehicle crossing specifications are set out in the Consent Notice registered to the Certificate of Title.

C. The Applicant has applied for a building consent (BC200465) under the Building Act 2004. The proposed activity complies in all other aspects with District Plan requirements with the exception of the vehicle crossing formation and construction. In order for the Council to issue a Building Consent for a permitted activity, the Owner agrees to provide a Bond to secure the carrying out of the vehicle crossing construction. The construction of the vehicle crossing shall be undertaken within 12 months of the bond being entered into or before the use of the proposed activity commences, whichever is the lesser.

D. The estimated cost of the construction and formation of the vehicle crossing to the required standard under the Consent Notice is estimated to be the sum of $2500.

CONDITIONS OF BOND:

Urban Vehicle Crossing
A vehicle crossing shall be provided to the Land in accordance with a formed in accordance with DD-01 Vehicle Crossing Details ''Crossing type B'' to the Consent Notice registered to the Land's Certificate of Title.

Notes:

1. *District Plan rules set out the location and sight distance requirements.*
2. *The Bond will not be deemed to be given effect to until the accessway is dug out and inspected by the Council's engineer. As such, the hold will remain on the consent until this time.*
3. *Note that anyone working in the road reserve will first need to obtain a Corridor Access permit from Council via the beforeUdig service (online at beforeUdig.co.nz or by phone at 0800 248 344).*

THIS AGREEMENT RECORDS:

1. The Owner(s) has deposited with the Council the sum of **$3025** as surety for this Bond and agree that the Council may hold the said sum of money until the conditions of this Bond have been fully met or the moneys shall have otherwise been disbursed in accordance with the terms of this Agreement.

2. The Owners acknowledges that the following vehicle crossing inspections are compulsory and the owner is required to give the Councils engineer 48 hours' notice prior to any inspection.

   - Pre-construction
   - Excavation to sub grade
   - Pre Seal
   - Final

3. The Owner(s) shall complete the Work to the reasonable satisfaction of the Council within 12 months of the date of this bond or within such longer period as the Council may approve.

4. The sum deposited with the Council includes a non-refundable fee of $525 for administration and inspection costs incidental to the preparation and release of this Bond.

5. The Owner(s) acknowledges that their liability under this Agreement shall not be released, varied or affected in any way by any delay, extension of time, or other indulgence suffered or permitted by the Council or by any failure or neglect by the Council to enforce the terms of this Agreement.

   5.1 If the Owner(s) shall be in breach of any of the obligations under this Agreement, it shall be lawful for the Council, at the sole option of the Council to arrange for the satisfactory completion of all of the works and for this purpose the Council may employ its servants or agents or such contractors as the Council may see fit.

   5.2 The Owner(s) shall pay all costs incurred by the Council in arranging for the completion of those works and the Owner(s) shall be liable for any sum so expended by the Council or any expenses incurred by the Council in excess of the sum bonded.

   5.3 The Council may apply the moneys deposited with the Council towards payment of all such costs and expenses and in the event that the sum deposited with the Council is not sufficient to carry out the said works the Council may recover any excess from the Owner as a liquidated debt.

   5.4 In the event that costs and expenses incurred by the Council for the formation of the vehicle crossing are less than that sum deposited with the Council then the Owners shall be entitled to the repayment of the balance in accordance with the provisions in Clause 5.

6. Upon completion of the work being competed to the reasonable satisfaction of the Council in accordance with the Consent Notice the Owner(s) shall be entitled to repayment to them of the moneys deposited with the Council but without any entitlement to interest and any of the costs payable under clause 5 of this bond.

7. In the event of the Owner not proceeding with the building works then the sum bonded will be refunded to them in accordance with Clause 5.

8. The Owner(s) shall pay any costs and disbursements incurred by the Council for additional inspections and in the enforcement by the Council of any of its rights under this Agreement.

9. If there is dispute between the parties arising out of, or in connection with, this bond, neither of the parties is to commence any proceedings relating to that dispute until the following procedure had been complied with:

    9.1 The party claiming a dispute has arisen must give written notice to the other party specifying the nature of the dispute.

    9.2 The parties will endeavour, in good faith to resolve the dispute referred to in the notice by using informal dispute resolution techniques.

    9.3 If the parties do not agree on a dispute resolution technique within 14 days after the date notice of a dispute was given, the dispute is to be mediated according to the standard Bond of LEADR New Zealand Incorporated (Lawyers Engaged in Alternative Dispute Resolution), and the Chair of LEADR (or the Chair's nominee) will select the mediator and determine the mediator's remuneration.

    9.4 A party seeking urgent interlocutory relief may, by notice to the other party, elect not to comply with the provisions of this clause, but only to the extent of the relief sought, and only for the period required to dispose of the application for interlocutory.

    9.5 Pending resolution of the dispute, this Bond will remain in full effect without prejudicing the parties' respective rights and remedies.

SIGNED by

_____ and

_____

in the presence of:

_____
Name of Witness

_____
Signature of Witness

_____
Address of Witness

_____
Occupation of Witness

PRODUCER STATEMENT PS3

TO: HURUNUI DISTRICT COUNCIL

IN RESPECT OF: **The supply, installation and commissioning of an E/One Pressure Sewer Grinder pump Collection system**

Address: 4 Pukeko Way, TeKoa Estate, Amberley – Lot 25

We, **Ecoflow Ltd** hereby confirm the following:

The installation at the above address complies with all Hurunui specifications, codes and bylaws for pressurised sewer systems

The pumping unit complies with all relevant New Zealand or Australian Standards and NSF/ANSI46:2005.

The electrical system complies with all relevant New Zealand or Australian Standards, and that the installation includes an hour run meter, low voltage protection, over pressure protection and emergency contact details at the alarm panel.

The storage tank and tank material complies with relevant New Zealand/Australian Standards AS/NZS 1546.1 for Tank Integrity.

Name Chris Walkley

……

Signature 

……

Date: 27/07/2021

Compaction Certificate

P O Box 13, Amberley
info@hurunui.govt.nz
Fax: 03 314 9181

Site Address Lot 25 , 4 Pukeko Way , Amberley

Client Name Steven and Wendy Olliver

Building Consent Number BC 200465

Builder/Contractor Name Digout Services Ltd

Address 304 Flaxton Road

Phone Number 0212212616

LBP Number _____

This is to confirm that on the (date) 17/03/2021 , I/we have placed and compacted AP40 or _____ in layers not exceeding 150mm per layer for the floor slab and finished with 25mm sand blinding on top.

I can confirm that the compacted hard fill in this foundation has been completed to meet the New Zealand Building Standards 3604.

Signed

Kevin Williams -Director

Name

ELECTRICAL CERTIFICATE OF COMPLIANCE & ELECTRICAL SAFETY CERTIFICATE

REFERENCE/CERTIFICATE ID NO.: 16779

This form has been designed to be used by licensed electrical workers to certify that installations or Part installations under **Part 1 or Part 2 of AS/NZS 3000** are safe to be connected to the **specified** system of electrical supply.

Location Details: 4 Pukeko Way, Amberley

Contact Details: (Name and address) NM Build t/a Triden Homes - 06admin@tridenthomes.nz

Name of Electrical worker: Chris Lavelle

Registration/Practising licence number: LMD 271 473

Phone & email: operations@telpower.co.nz 033394150

Name and registration number of person(s) supervised:

Certificate of Compliance

Type of work: ☐ Addition ☐ Alteration ■ New work

The prescribed electrical work is: ☐ Low risk ☐ General ■ High-risk (Specify):

Means of compliance: ☐ Part 1 of AS/NZS 3000 ■ Part 2 of AS/NZS 3000

Additional Standards or electrical code of practice were required: ■ No ☐ Yes (specify):

Date or range of dates that prescribed electrical work undertaken: 6/09/2019

Contains fittings that are safe to connect to a power supply? ☐ Yes ☐ No

Specify type of supply system:

The installation has an earthing system that is correctly rated (where applicable) ■ Yes ☐ No

Parts of the installation to which this certificate relates that are safe to connect to a power supply?

☐ All ☐ Parts (specify)

The work relies on manufacturers instructions: ☐ Yes ■ No

If yes – identify the instruction manual including name, date and version. Also attach a copy of manufacturer's instructions to this certificate.
(Or provide reference to readily accessible electronic format, eg Internet link.)

Identify:
Link:

The work has been done in accordance with a certified design: ☐ Yes ■ No

If yes – identify the certified design including name, date and version. Also attach a copy of the certified design to this certificate.
(Or provide reference to readily accessible electronic format, eg Internet link.)

Identify:
Link:

The work relies on a Supplier Declaration of Conformity (SDoC): ☐ Yes ■ No

If yes - identify the SDoC including name, date and version OR EESS registration. Also attach a copy of the SDoC to this certificate.
(Or provide reference to readily accessible electronic format, eg Internet link.)

Identify:
Link:

The installation has been satisfactorily tested in accordance with the Electricity (Safety) Regulations 2010 ☐ No ■ Yes

Description of Work:

Trenched and installed 16mm 3-phase NS mains cable

1000m Ohms per phase

Test Results (provide values)		
Polarity (Independent earth):		
Insulation resistance:	1000m	Ohms
Earth Continuity:		Ohms
Bonding:		Ohms
Fault Loop impedance		Ohms
Other (specify):		

By signing this document I certify that the completed prescribed electrical work to which this Certificate of Compliance applies has been done lawfully and safely, and the information in the certificate is correct.

Certifier's signature: **Date:** 28/06/2021

Electrical Safety Certificate

By signing this document I certify that the installation, or part of the installation, to which this Electrical Safety Certificate applies is connected to a power supply and is safe to use.

Certifier's name: **Registration/Practising licence number:**

Certifier's signature: **Certificate Issue Date:** **Connection Date:**

CUSTOMER COPY – THIS IS AN IMPORTANT DOCUMENT AND SHOULD BE RETAINED FOR A MINIMUM OF 7 YEARS

This Electrical Safety Certificate also confirms that the electrical work complies with the building code for the purposes of Section 19(1)(e) of the Building Act 2004.

ELECTRICAL CERTIFICATE OF COMPLIANCE & ELECTRICAL SAFETY CERTIFICATE

REFERENCE/CERTIFICATE ID NO.: 16707

This form has been designed to be used by licensed electrical workers to certify that installations or Part installations under **Part 1 or Part 2 of AS/NZS 3000** are safe to be connected to the **specified** system of electrical supply.

Location Details: 4 Pukeko Way, Amberley

Contact Details: (Name and address) N M Build t/a Trident Homes: 06admin@tridenthomes.nz

Name of Electrical worker: Chris Lavelle

Registration/Practising licence number: LMD271473

Phone & email: operations@telpower.co.nz 033394150

Name and registration number of person(s) supervised:

Certificate of Compliance

Type of work: ☐ Addition ☐ Alteration ☐ New work

The prescribed electrical work is: ☐ Low risk ■ General ■ High-risk (Specify):

Means of compliance: ☐ Part 1 of AS/NZS 3000 ■ Part 2 of AS/NZS 3000

Additional Standards or electrical code of practice were required: ■ No ☐ Yes (specify):

Date or range of dates that prescribed electrical work undertaken: 6/09/2019

Contains fittings that are safe to connect to a power supply? ☐ Yes ☐ No

Specify type of supply system:

The installation has an earthing system that is correctly rated (where applicable) ■ Yes ☐ No

Parts of the installation to which this certificate relates that are safe to connect to a power supply?

☐ All ☐ Parts (specify)

The work relies on manufacturers instructions: ☐ Yes ■ No

If yes – identify the instruction manual including name, date and version. Also attach a copy of manufacturer's instructions to this certificate.
(Or provide reference to readily accessible electronic format, eg Internet link.)

Identify:
Link:

The work has been done in accordance with a certified design: ☐ Yes ■ No

If yes – identify the certified design including name, date and version. Also attach a copy of the certified design to this certificate.
(Or provide reference to readily accessible electronic format, eg Internet link.)

Identify:
Link:

The work relies on a Supplier Declaration of Conformity (SDoC): ☐ Yes ■ No

If yes - identify the SDoC including name, date and version OR EESS registration. Also attach a copy of the SDoC to this certificate.
(Or provide reference to readily accessible electronic format, eg Internet link.)

Identify:
Link:

The installation has been satisfactorily tested in accordance with the Electricity (Safety) Regulations 2010 ☐ No ■ Yes

Description of Work:

Installed 16mm 1-Phase NS mains + bare earth in an open trench

Test Results (provide values)		
Polarity (Independent earth):		
Insulation resistance:	1000M	Ohms
Earth Continuity:		Ohms
Bonding:		Ohms
Fault Loop impedance		Ohms
Other (specify):		

By signing this document I certify that the completed prescribed electrical work to which this Certificate of Compliance applies has been done lawfully and safely, and the information in the certificate is correct.

Certifier's signature: **Date:** 16/04/2021

Electrical Safety Certificate

By signing this document I certify that the installation, or part of the installation, to which this Electrical Safety Certificate applies is connected to a power supply and is safe to use.

Certifier's name: **Registration/Practising licence number:**

Certifier's signature: **Certificate Issue Date:** **Connection Date:**

CUSTOMER COPY – THIS IS AN IMPORTANT DOCUMENT AND SHOULD BE RETAINED FOR A MINIMUM OF 7 YEARS

This Electrical Safety Certificate also confirms that the electrical work complies with the building code for the purposes of Section 19(1)(e) of the Building Act 2004.

ELECTRICAL CERTIFICATE OF COMPLIANCE & ELECTRICAL SAFETY CERTIFICATE

REFERENCE/CERTIFICATE ID NO.: #7313C2

This form has been designed to be used by licensed electrical workers to certify that installations or Part installations under **Part 1 or Part 2 of AS/NZS 3000** are safe to be connected to the **specified** system of electrical supply.

Location Details: 4 Pukeko Way Lot 25, Amberley, 7410

Contact Details: (Name and address) Greg Lyon glyon@tridenthomes.nz, 027 542 1944

Name of Electrical worker: Dom Farquhar

Registration/Practising licence number: E267187

Phone & email: dom.ezibreeze@gmail.com, 0273451405

Name and registration number of person(s) supervised: Brodie Terris

Certificate of Compliance

Type of work: ☐ Addition ☐ Alteration ☑ New work

The prescribed electrical work is: ☐ Low risk ☑ General ☐ High-risk (Specify):

Means of compliance: ☐ Part 1 of AS/NZS 3000 ☑ Part 2 of AS/NZS 3000

Additional Standards or electrical code of practice were required: ☑ No ☐ Yes (specify):

Date or range of dates that prescribed electrical work undertaken: 19/7/2021 to 29/7/2021

Contains fittings that are safe to connect to a power supply? ☑ Yes ☐ No

Specify type of supply system: 230V single phase MEN

The installation has an earthing system that is correctly rated (where applicable) ☑ Yes ☐ No

Parts of the installation to which this certificate relates that are safe to connect to a power supply?

☑ All ☐ Parts (specify)

The work relies on manufacturers instructions: ☐ Yes ☑ No

If yes – identify the instruction manual including name, date and version. Also attach a copy of manufacturer's instructions to this certificate.
(Or provide reference to readily accessible electronic format, eg Internet link.)

Identify:
Link:

The work has been done in accordance with a certified design: ☐ Yes ☑ No

If yes – identify the certified design including name, date and version. Also attach a copy of the certified design to this certificate.
(Or provide reference to readily accessible electronic format, eg Internet link.)

Identify:
Link:

The work relies on a Supplier Declaration of Conformity (SDoC): ☑ Yes ☐ No

If yes - identify the SDoC including name, date and version OR EESS registration. Also attach a copy of the SDoC to this certificate.
(Or provide reference to readily accessible electronic format, eg Internet link.)

Identify: Radcliffe electrical Rangiora
Link: Www.jrrussel.co.nz

The installation has been satisfactorily tested in accordance with the Electricity (Safety) Regulations 2010 ☐ No ☑ Yes

Description of Work:
New house installation, as per plan and components list

Test Results (provide values)		
Polarity (Independent earth):	Correct	
Insulation resistance:	999Mohms	Ohms
Earth Continuity:	0.1	Ohms
Bonding:	0.1	Ohms
Fault Loop impedance	0.54	Ohms
Other (specify):		

By signing this document I certify that the completed prescribed electrical work to which this Certificate of Compliance applies has been done lawfully and safely, and the information in the certificate is correct.

Certifier's signature: 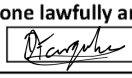 **Date:** 29/7/2021

Electrical Safety Certificate

By signing this document I certify that the installation, or part of the installation, to which this Electrical Safety Certificate applies is connected to a power supply and is safe to use.

Certifier's name: Dom Farquhar

Registration/Practising licence number: E267187

Certifier's signature: 

Certificate Issue Date: 29/7/2021

Connection Date: 29/7/2021

CUSTOMER COPY – THIS IS AN IMPORTANT DOCUMENT AND SHOULD BE RETAINED FOR A MINIMUM OF 7 YEARS

This Electrical Safety Certificate also confirms that the electrical work complies with the building code for the purposes of Section 19(1)(e) of the Building Act 2004.

Powered by Fergus

4 Pukeko Way, Amberley

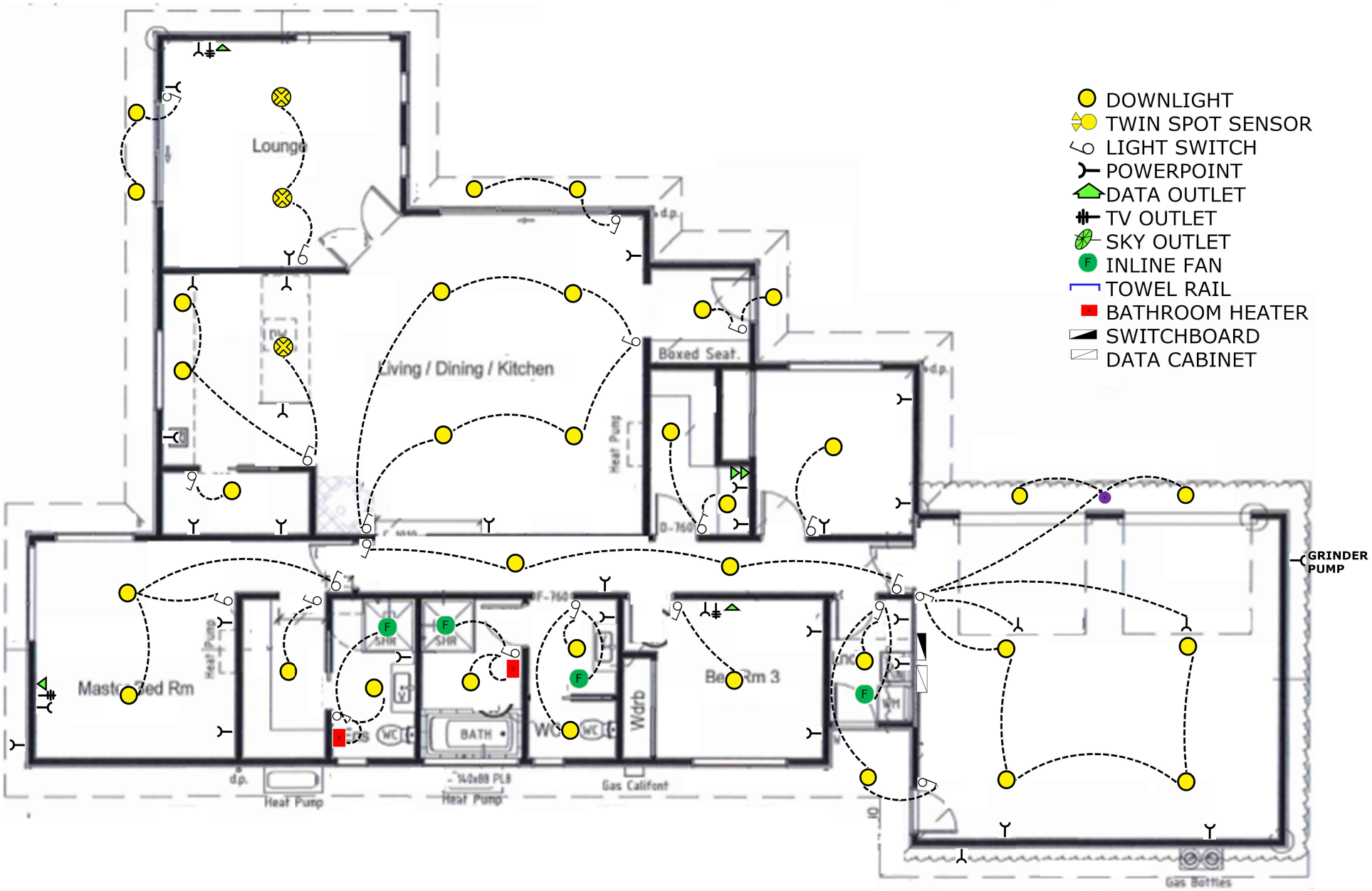

Ezi-Breeze Ltd
98 Boundary Road RD 5, Rangiora, 7475
info@ezibreeze.co.nz
03 3522780

Electrical Component List

ELECTRICAL COMPONENT LIST (ADDITION TO COC)

LOCATION DETAILS

4 Pukeko Way Lot 25, Amberley, 7410

COC NUMBER

#7313

DATE

07/29/2021

DESCRIPTION/NUMBER OF FITTING IN INSTALLATION

DOWNLIGHTS

34

PENDANT LIGHTS

3

OTHER LIGHTS (INTERNAL)

3

EXTERNAL LIGHTS

SENSOR LIGHTS

SENSORS

2

POWER OUTLETS

33

DATA OUTLETS

TV OUTLETS

LIGHT SWITCHES

20

INLINE FANS

4

SMOKE DETECTORS

2

WATER HEATING

- [ ] HWC
- [x] GAS

NUMBER OF BATHROOM HEATERS

2

TOWEL RAILS

TOWEL RAIL (MODEL AND WHO SUPPLIED)

BATHROOM HEATERS (MODEL AND WHO SUPPLIED)

Serene 2068 owner supplied

TYPE AND SIZE OF SWITCHBOARD

Vinco sb/meter box

HOB, BRAND & MODEL

OVEN, BRAND & MODEL

Fisher and paykel

EXTERNAL LIGHTS (MODEL/TYPE AND WHO SUPPLIED)

ALARM

- [ ] YES
- [x] NO

NUMBER OF ALARM SENSORS

- [x] WIFI ADDITION

UNDERTILE HEATING (PLACEMENTS/SIZE)

HEATPUMP POSITION AND MODEL

As71 in living and tcl370113 in the bedroom

ANY OTHER COMMENTS ADDITIONS

PRODUCER STATEMENT PS3

TO: HURUNUI DISTRICT COUNCIL

IN RESPECT OF: **The supply, installation and commissioning of an E/One Pressure Sewer Grinder pump Collection system**

Address: 4 Pukeko Way, TeKoa Estate, Amberley – Lot 25

We, **Ecoflow Ltd** hereby confirm the following:

The installation at the above address complies with all Hurunui specifications, codes and bylaws for pressurised sewer systems

The pumping unit complies with all relevant New Zealand or Australian Standards and NSF/ANSI46:2005.

The electrical system complies with all relevant New Zealand or Australian Standards, and that the installation includes an hour run meter, low voltage protection, over pressure protection and emergency contact details at the alarm panel.

The storage tank and tank material complies with relevant New Zealand/Australian Standards AS/NZS 1546.1 for Tank Integrity.

Name Chris Walkley

……

Signature 

……

Date: 27/07/2021

HURUNUI DISTRICT COUNCIL
P.O. Box 13 | Amberley | 7441 | 66 Carters Road | Amberley | 7410
Phone 03 314-8816 | Fax 03 314-9181 | Email info@hurunui.govt.nz
Web hurunui.govt.nz | facebook.com/HurunuiDistrictCouncil
Skype hdc_customer_services | twitter.com/hurunuidc

FORM 6
CODE COMPLIANCE CERTIFICATE APPLICATION
Section 92, Building Act 2004

APPLICATION

Building Consent No : **BC200465** Consent issued by Hurunui District Council

THE OWNER		AGENT – APPLICANT N/A ☐ *(leave section blank)*	
Owner's Name :	Steven and Wendy Olliver	Agent's Name :	NM Build Ltd t/a Trident Homes Christchurch North
Contact Person : (if owner is not an individual)	Steven Olliver	Contact Person :	Peter Nisbet
Mailing Address :	19 South Crescent Amberley	Mailing or Billing Address :	PO Box 76-178 Northwood Christchurch
Postcode :	7410	Postcode :	8548
Street Address or Registered Office :		Street Address or Registered Office :	756 Main North Road Belfast Christchurch
Postcode :		Postcode :	8051
Mobile Phone :	027 236 4922	Mobile Phone :	0274 888 201
Phone :		Phone :	03 375 9020
After Hours Phone :		After Hours Phone :	
Landline number :		Landline number :	
Daytime phone :		Daytime phone :	
Fax number :		Fax number :	
E-mail Address :	wendyolliver62@yahoo.com.au	E-mail Address :	pnisbet@tridenthomes.nz
Website :		Website :	www.tridenthomes.nz

Note – The Agent (if appointed) will be the first point of contact for communications with the Council / Building Consent Authority regarding this application / building work and will receive all correspondence including all invoices

The Code Compliance certificate should be sent to : ☐ Owner ☑ Agent

All building work carried out under the above Building Consent was completed on - Date : 2/8/2021

The following evidence of ownership is attached to this application : ☑ Certificate of Title
☐ Sale and Purchase Agreement (only if new purchase)

SIGNATURE

I request that the Hurunui District Council Building Consent Authority issue a Code Compliance Certificate for this work (under section 95 of the Building Act 2004)

Signature of owner / or agent on behalf of and with the authority of the owner : Peter Nisbet

☐ Owner ☑ Agent Date : 9/9/2021

Note : If acting "for and on behalf", please read the following declaration before signing :

"I hereby declare that I am authorised to act as Agent of the Owner"

THE PERSONNEL WHO CARRIED OUT WORK OTHER THAN RESTRICTED BUILDING WORK	
Name of Builder : Camel Construction	Phone Number : 021 749 374
Postal Address : 78 Cainbrea Drive, Christchurch	Registration Number : 104038
E-mail Address : tim@camelconstruction.co.nz	
Name of Craftsman Plumber : Signature Plumbing Ltd	Phone Number : 027 451 4436
Postal Address : 143 Mandeville Road, RD2, Kaiapoi	Registration Number : 16161
E-mail Address : signatureplumbing@xtra.co.nz	
Name of Craftsman Gasfitter : The Gas Guys	Phone Number : 03 310 6810
Postal Address : 386 High Street, Rangiora	Registration Number : 21905
E-Mail Address : admin@gasguys.co.nz	
Name of Registered Drain-layer : Pipe Rite Drainage	Phone Number : 021 229 3015
Postal Address : 83 Youngs Road, RD1, Rangiora	Registration Number : 18538
E-mail Address : office@piperite.co.nz	
Name of Electrician : EziBreeze Ltd	Phone Number : 03 313 5966
Postal Address : PO Box 705, Rangiora	Registration Number : E267187
E-mail Address : sharon@ezibreeze.co.nz	
Name of soild / liquid fuel burner installer :	Phone Number :
Postal Address :	Registration Number :
E-mail Address :	
Name of other Contractor / Tradesperson :	Phone Number :
Postal Address :	Registration Number :
E-mail Address :	
Add any additional persons on another (separate) sheet.	

ATTACHMENTS

The following supporting documents are attached to this application :

- ☑ Certificates / other documents from the personnel who carried out the work
- ☑ Certificates that relate to the energy work
- ☑ Evidence that Specified Systems are capable of performing to the performance standards set out in the building consent
- ☑ Memoranda from Licensed Building Practitioner(s) stating what Restricted Building Work they carried out or supervised

Notes by applicant: (Other notes or comments which you as the applicant may wish to add)

RESTRICTED BUILDING WORK

Did the Building Consent work include any restricted building work ☑ Yes ☐ No

If yes, provide the following details of all licensed building practitioners who were involved in the carrying out or supervising the restricted building work

Licensing Class	Name and address	Licensed building practitioner number (or registration number treated as being licensed under section 291 of the building Act 2004)	Description of particular work carried out or supervised
Foundations	Concrete Contractors Ltd	136689	
Carpentry	Camel Construction	104038	
Exterior Plasterer	Service Plus Install	BP132938	
Brick-layer			
Block-layer			
Roofer	Stratco	BP104257	

SPECIFIED SYSTEMS

Are there specified systems associate with this project? ☐ Yes (as listed below) ☑ No

The following specified systems are contained on the compliance schedule for the building and, in the opinion of the personnel who installed them, are capable of performing to the performance standards set out in the building consent.

SS1 Automatic systems for fire suppression
SS2 Emergency warning systems
SS3/1 Automatic doors
SS3/2 Access controlled doors
SS3/3 Interfaced fire or smoke doors and / or w indows
SS4 Emergency lighting systems
SS5 Escape route pressurisation systems
SS6 Riser Mains
SS7 Automatic back flow preventers
SS8/1 Passenger carrying lifts
SS8/2 Service lifts
SS8/3 Escalator and moving walks
SS9 Mechanical ventilation or air conditioning systems
SS10 Building maintenance units
SS11 Laboratory fume cupboards
SS12/1 Audio loops
SS12/2 FM radio and infrared beam transmission systems
SS13/1 Mechanical smoke control
SS13/2 Natural smoke control
SS13/3 Smoke curtains
SS14/1 Emergency power systems
SS14/2 Sign44s for SS1-13
SS15/1 Spoken information intended to facilitate evacuation
SS15/2 Final exits
SS15/3 Fire separations
SS15/4Signs for facilitating evacuation
SS15/5 Smoke separations
SS16 Cable cars

Additional Information to Note

1. A final inspection must have been completed prior to this application being sought.
2. The Code Compliance Certificate will be based on the approved building consent documents, so any variations to the original approved plans are required to be documented and approved prior to the work being carried out.
3. A Code Compliance Certificate will not be issued until all of the information required on this form that is relevant to the job is provided to the Council. This includes all names, certificates from personnel who carried out the work, registration numbers, producer statements, or any other required documents

HURUNUI DISTRICT COUNCIL
P.O. Box 13 | Amberley | 7441 | 66 Carters Road | Amberley | 7410
Phone 03 314-8816 | Fax 03 314-9181 | Email info@hurunui.govt.nz
Web hurunui.govt.nz | facebook.com/HurunuiDistrictCouncil
Skype hdc_customer_services | twitter.com/hurunuidc

NM Build Ltd t/a Trident Homes Christchurch
PO Box 76178
Northwood
Christchurch 8548

09 August 2021

Dear Sir/Madam,

Re: APPLICATION FOR CODE COMPLIANCE CERTIFICATE
BC200465: New residential dwelling
4 Pukeko Way, Amberley

The Council has received a code compliance request in relation to New residential dwelling at 4 Pukeko Way, Amberley. The construction has been assessed for compliance with the Building Act 2004 and the original building consent requirements.

Before we can issue the Code Compliance Certificate, there is some additional information that we require:

1. Two additional inspections were carried out over an above the fixed fee application, please refer to attached invoice.
2. Form6 A – Application form, the Gas fitter and Drainlayer details do not match the documents provided for the project, please amend and return
3. Please provide memorandum for restricted building works (Foundation missing)

Please send this information to us within 28 days of this letter. Providing the information within 28 days will allow your application to be considered, otherwise we are required to refuse the application.

If there is anything we can do to assist you in progressing this application, please don't hesitate to contact me.

Regards,

Brenna Ogier
Building Support Officer
Phone: 03 314 8816
Email: building@hurunui.govt.nz

GASFITTING CERTIFICATE OF COMPLIANCE – GAS SAFETY CERTIFICATE

Certificate of Compliance:

Client Name: Stephen and Wendy Olliver

Reference / Job #: 060056-325.1 **ICP (if known):**

Address of work: 4 Pukeko Way

Suburb: **Town / City:** Amberley

Description of gasfitting work: (If different gasfitting work was done by different people, state who did what gasfitting.)

Installed Rinnai A26 Water Heater
Installed 8kg Changeover Regulator
Certify
Installed Fisher & Paykel Gas Hob
Installed Gas Pipe and Fittings

Gas supply pressure 3 kPa **Risk classification** (tick one) ☐ Low-Risk ■ General ☐ High-risk

Gas type (tick one) ☐ Natural gas ■ LPG ☐ Biogas ☐ Other (specify)

The work has been done in accordance with a certified design: ☐ Yes ■ No

If yes – identify the certified design including name, date and version. Also attach a copy of the certified design to this certificate.
(Or provide reference to readily accessible electronic format, eg Internet link.)

Identify:
Link:

The work relies on manufacturer's instructions: ■ No ☐ Yes:

If yes – identify the instruction manual including name, date and version. Also attach a copy of manufacturer's instructions to this certificate.
(Or provide reference to readily accessible electronic format, eg Internet link.)

Identify:
Link:

The work has been done in accordance with means of compliance (specify):

■ Yes – AS/NZS 5601.1 sections 3 to 6 ☐ Yes – AS/NZS 5601.2 sections 3 to 9 ☐ No

Were any other standards or gas code of practice required for compliance?

☐ Yes (specify) ■ No

Parts of the gas installation to which this certificate relates that are safe to connect to a gas supply?

■ All ☐ Parts (specify)

Date(s) on which the work was done: 27th July 2021

Name and registration number of anyone who carried out work under supervision: -

By signing this document I confirm that I am satisfied that the work described in this certificate of compliance has been done lawfully and safely, and that the information on this certificate is correct.

Certifier name: Nathan Shadforth **Registration number:** 21905

Certifier Signature: **Date:** 27.07.2021

Gas Safety Certificate:

By signing this document I confirm that the work described in this Gas Safety Certificate, and the installation or part installation, is connected to a gas supply and is safe to use.

Name of person authorised to certify the connection: Nathan Shadforth

Registration number: 21905 **Date of completion or connection** 27.07.2021

Certifier Signature: **Date:** 27.07.2021

This Gas Safety Certificate confirms that the gasfitting work complies with the building code for the purposes of Section 19(1)(e) of the Building Act 2004.

HURUNUI DISTRICT COUNCIL
P.O. Box 13 | Amberley | 7441 | 66 Carters Road | Amberley | 7410
Phone 03 314-0006 | Fax 03 314-9181 | Email info@hurunui.govt.nz
Web hurunui.govt.nz | facebook.com/HurunuiDistrictCouncil
Skype hdc_customer_services | twitter.com/hurunuidc

Certification

Plumbing

Issued by (plumber) : Joseph Harris

(To Hurunui District Council)

OWNER'S DETAILS	
Owner's name :	Steven and Wendy Olliver
Project address :	Lot 25, 4 Pukeko Way Amberley
Building consent number :	**BC200465**
Description of building work :	New Plumbing - residential dwelling

I (plumber) Signature Plumbing Ltd

have been engaged by Trident Homes Christchurch North (building consent applicant)

to undertake the plumbing work on the above building consent.

I hereby certify that hot and cold water pipes have been pressure tested to 1500kPa for a period of not less than 15 minutes without pressure drop complying with NZ Building Code G12/AS1 clause 7.5.1

I understand that this certificate, if accepted, will be relied upon by Hurunui District Council for the purpose of establishing compliance with the Building Consent.

PLUMBER'S DETAILS			
Plumber's name :	Signature Plumbing Ltd		
Address :	143 Mandeville Road RD2 Kaiapoi		
Registration number :	16161	Mobile phone :	027 451 4436
Phone (work) :	027 451 4436	E-mail address :	signatureplumbing@xtra.co.nz
Signature :		Date :	2/8/2021

Building Control and City Rebuild Group

Producer statement construction (PS3)

All sections of this PS3 must be completed

Tick applicable Contractor for:

☐ Building	☐ Emergency Lighting	☒ Cladding	☐ Escalator
☐ Waterproof Membranes	☐ Drainlayer	☐ Fire Alarm	☐ Lift
☐ Mechanical (HVAC)	☐ Solar Heating	☐ Other (specify):	

Author name:
Sharon Weir

Author company:
Service Plus Install Solutions Ltd

Site address:
4 PUKEKO WAY, AMBERLEY

Description of building work:
Supply & Install of James Hardie LINEA Weather Board Cladding
Over 20 mm ventilated cavity system as per plans provided and specs in conjunction with
James Hardie Install Guide

Owners Details:
WENDY & STEVEN OLIVER

Scope of work covered by statement:
Supply & Install of James Hardie LINEA Weather Board Cladding
Over 20 mm ventilated cavity system as per plans provided and specs in conjunction with
James Hardie Install Guide

System/Product used (if applicable):
Supply & Install of James Hardie LINEA Weather Board Cladding
Over 20 mm ventilated cavity system as per plans provided and specs in conjunction with
James Hardie Install Guide

I (constructor): Service Plus Install Solutions Ltd have been engaged by

TRIDENT HOMES (applicant, designer, main contractor etc) to construct: ☐ part ☒ all

As specified in the attached particulars of Building Consent Number: BC200465 and its attached conditions and am satisfied on reasonable grounds that the building work specified above has been completed to the extent required by that Building Consent and complies with the Building Consent.

NZBC clauses:
[select as applicable]

☐ B1	☒ B2	☐ C1	☐ C2	☐ C3	☐ C4	☐ C5	☐ C6	☐ D1	☐ D2	☐ E1	☒ E2	
☐ E3	☐ F1	☐ F2	☐ F3	☐ F4	☐ F5	☐ F6	☐ F7	☐ F8	☐ G1	☐ G2	☐ G3	
☐ G4	☐ G5	☐ G6	☐ G7	☐ G8	☐ G9	☐ G10	☐ G11	☐ G12	☐ G13	☐ G14	☐ G15	
☐ H1												

I understand that this Producer Statement, if accepted, may be relied on by the Council for the purpose of establishing compliance with the Building Consent.

Registration No: Or ☒ N/A

Qualifications/Experience:

Aligned Installers for James Hardie - 4.5 years experience

Address:	Postcode:
15 Picadilly Av, Casebrook	8051

Phone:	Fax:
0274 993488	

Mobile:	Email:
0274 993488	sharon@serviceplusinstall.co.nz

Signature:	Date:
	27/7/21

Memorandum from licensed building practitioner: Record of building work

Section 88, Building Act 2004

Please fill in the form as fully and correctly as possible.

If there is insufficient room on the form for requested details, please continue on another sheet and attach the additional sheet(s) to this form.

THE BUILDING	
Street address: 4 Puketo Way.	
Suburb:	
Town/City: Amberley.	Postcode:

THE PROJECT
Building consent number: BC200465

THE OWNER(S)	
Name(s): Steven and Wendy Olliver	
Mailing address:	
Suburb:	PO Box/Private Bag:
Town/City:	Postcode:
Phone number:	Email address:

RECORD OF WORK THAT IS RESTRICTED BUILDING WORK

PRIMARY STRUCTURE

Work that is restricted building work	Description of restricted building work	Carried out or supervised
Tick ✓	If necessary, describe the restricted building work	Tick ✓ whether you carried out the restricted building work or supervised someone else carrying out the restricted building work
Foundations and subfloor framing ☐		○ Carried out ○ Supervised
Walls ☑	Installed preframed timber walls as per plan	○ Carried out ✓ Supervised
Roof ☑	Installed pre framed timber trusses as per plan	✓ Carried out ○ Supervised
Columns and beams ☑	Installed timber garage beam as per plan	○ Carried out ✓ Supervised
Bracing ☐	Installed bracing elements (fixings etc) as per plan	○ Carried out ✓ Supervised
Other ☐		○ Carried out ○ Supervised

EXTERNAL MOISTURE MANAGEMENT SYSTEMS		
Work that is restricted building work	**Description of restricted building work**	**Carried out or supervised**
Tick ✓	If necessary, describe the restricted building work	Tick ✓ whether you carried out the restricted building work or supervised someone else carrying out the restricted building work
Damp proofing ☐		○ Carried out ○ Supervised
Roof cladding or roof cladding system ☐		○ Carried out ○ Supervised
Ventilation system (for example, subfloor or cavity) ☐		○ Carried out ○ Supervised
Wall cladding or wall cladding system ☐		○ Carried out ○ Supervised
Waterproofing ☐		○ Carried out ○ Supervised
Other ☐		○ Carried out ○ Supervised

ISSUED BY

Name and contact details of the licensed building practitioner who is licensed to carry out or supervise restricted building work.

Name: Tim Hamer	LBP number: 104038
Class(es) licensed in: Carpentry	
Plumbers, Gasfitters and Drainlayers registration number (if applicable):	
Mailing address (if different from below):	
Street address/Registered office: 78 Cairnbrae Drive	
Suburb:	Town/City:
PO Box/Private Bag	Postcode:
Phone number:	Mobile: 021 749374
After hours:	Fax:
Email address: hmhamer@hotmail.co.nz	Website:

DECLARATION

I Tim Hamer carried out or supervised the restricted building work recorded on this form.

Signature: _____

Date: 16 July 2021

Memorandum from licensed building practitioner: Record of building work

Section 88, BuildingAct 2004

Please fill in the form as fully and correctly as possible.

If there is insufficient room on the form for requested details, please continue on another sheet and attach the additional sheet(s) to this form.

THE BUILDING

Street address: 4 PUKEKO WAY	
Suburb:	
Town/City: AMBERLEY	Postcode:

THE PROJECT

Building consent number: BC200465

THE OWNER(S)

Name(s): TRIDENT HOMES	
Mailing address:	
Suburb:	PO Box/Private Bag: PO BOX 9400
Town/City: OAMARU	Postcode: 9444
Phone number:	Email address:

RECORD OF WORK THAT IS RESTRICTED BUILDING WORK

PRIMARY STRUCTURE

Work that is restricted building work	Description of restricted building work	Carried out or supervised
Tick ✓	If necessary, describe the restricted building work.	Tick whether you carried out the restricted building work or supervised someone else carrying out the restricted building work.
Foundations and subfloor framing ☐		◯ Carried out ◯ Supervised
Walls ☐		◯ Carried out ◯ Supervised
Roof ☐		◯ Carried out ◯ Supervised
Columns and beams ☐		◯ Carried out ◯ Supervised
Bracing ☐		◯ Carried out ◯ Supervised
Other ☐		◯ Carried out ◯ Supervised

EXTERNAL MOISTURE MANAGEMENT SYSTEMS		
Work that is restricted building work	**Description of restricted building work**	**Carried out or supervised**
Tick ✓	If necessary, describe the restricted building work.	Tick ✓ whether you carried out the restricted building work or supervised someone else carrying out the restricted building work.
Damp proofing ☐		◯ Carried out ◯ Supervised
Roof cladding or roof cladding system ☐		◯ Carried out ◯ Supervised
Ventilation system (for example, subfloor or cavity) ☐		◯ Carried out ◯ Supervised
Wall cladding or wallcladding system ☑		x Carried out x Supervised
Waterproofing ☐		◯ Carried out ◯ Supervised
Other ☐		◯ Carried out ◯ Supervised

ISSUED BY

Name and contact details of the licensed building practitioner who is licensed to carry out or supervise restricted building work.

Name: COREY VALE	LBP number: BP132938
Class(es) licensed in:	
Carpentry	
Plumbers, Gasfitters and Drainlayers registration number (if applicable):	
Mailing address (if different from below):	
Street address/Registered office: 42 Jelfs Rd	
Suburb: WOODEND	Town/City: WOODEND
PO Box/Private Bag	Postcode:
Phone number:	Mobile: 027 709 6740
After hours:	Fax:
Email address: CoreyVale44@gmail.com	Website:

DECLARATION

I Corey Vale carried out or supervised the restricted building work recorded on this form.

Signature: 

Date: 15/10/20

Form 6A

Memorandum from licensed building practitioner: Record of building work

Section 88, Building Act 2004

Please fill in the form as fully and correctly as possible.
If there is insufficient room on the form for requested details, please continue on another sheet and attach the additional sheet(s) to this form.

THE BUILDING	
Street address: 4 Pukeko Way	
Suburb: Amberley	
Town/City:	Postcode:

THE PROJECT
Building consent number: 200465A

THE OWNER(S)	
Name(s): Wendy & Steven Olliver	
Mailing address:	
Suburb:	PO Box/Private Bag:
Town/City:	Postcode:
Phone number:	Email address:

RECORD OF WORK THAT IS RESTRICTED BUILDING WORK

PRIMARY STRUCTURE

Work that is restricted building work	**Description of restricted building work**	**Carried out or supervised**
Tick ✓	If necessary, describe the restricted building work.	Tick ✓ whether you carried out the restricted building work or supervised someone else carrying out the restricted building work.
Foundations and subfloor framing ✓	3604 Foundation as per Consented plans	✓ Carried out ○ Supervised
Walls ○		○ Carried out ○ Supervised
Roof ○		○ Carried out ○ Supervised
Columns and beams ○		○ Carried out ○ Supervised
Bracing ○		○ Carried out ○ Supervised
Other ○		○ Carried out ○ Supervised

EXTERNAL MOISTURE MANAGEMENT SYSTEMS		
Work that is restricted building work	**Description of restricted building work**	**Carried out or supervised**
Tick ✓	If necessary, describe the restricted building work.	Tick ✓ whether you carried out the restricted building work or supervised someone else carrying out the restricted building work.
Damp proofing ✓	One layer of DPM as per consented plans	✓ Carried out ○ Supervised
Roof cladding or roof cladding system ○		○ Carried out ○ Supervised
Ventilation system (for example, subfloor or cavity) ○		○ Carried out ○ Supervised
Wall cladding or wall cladding system ○		○ Carried out ○ Supervised
Waterproofing ○		○ Carried out ○ Supervised
Other ○		○ Carried out ○ Supervised

ISSUED BY

Name and contact details of the licensed building practitioner who is licensed to carry out or supervise restricted building work.

Name: Greg Richardson	LBP number: 136689
Class(es) licensed in: Foundations	
Plumbers, Gasfitters and Drainlayers registration number (if applicable):	
Mailing address (if different from below):	
Street address/Registered office: 102 Sunline ave	
Suburb: Lincoln	Town/City:
PO Box/Private Bag	Postcode: 7608
Phone number:	Mobile: 0272587043
After hours:	Fax:
Email address: office.concreteContracts@gmail.com	Website:

DECLARATION

I Greg Richardson carried out or supervised the restricted building work recorded on this form.

Signature: [signature]

Date: 29 April 2021

Memorandum from licensed building practitioner: Record of building work

Section 88, Building Act 2004

Please fill in the form as fully and correctly as possible.

If there is insufficient room on the form for requested details, please continue on another sheet and attach the additional sheet(s) to this form.

THE BUILDING	
Street address: 4 Pukeko Way	
Suburb: Amberley	
Town/City: Christchurch	Postcode:

THE PROJECT
Building consent number: BC200465A

THE OWNER(S)	
Name(s): Trident Homes Christchurch North (Oliver Residence)	
Mailing address:	
Suburb: Northwood	PO Box/Private Bag: PO Box 76178
Town/City: Christchurch	Postcode: 8548
Phone number:	Email address:

RECORD OF WORK THAT IS RESTRICTED BUILDING WORK

PRIMARY STRUCTURE

Work that is restricted building work	Description of restricted building work	Carried out or supervised
Tick ✓	If necessary, describe the restricted building work.	Tick ✓ whether you carried out the restricted building work or supervised someone else carrying out the restricted building work.
Foundations and subfloor framing ☐		○ Carried out ○ Supervised
Walls ☐		○ Carried out ○ Supervised
Roof ☐		○ Carried out ○ Supervised
Columns and beams ☐		○ Carried out ○ Supervised
Bracing ☐		○ Carried out ○ Supervised
Other ☐		○ Carried out ○ Supervised

EXTERNAL MOISTURE MANAGEMENT SYSTEMS		
Work that is restricted building work	**Description of restricted building work**	**Carried out or supervised**
Tick ✓	If necessary, describe the restricted building work.	Tick ✓ whether you carried out the restricted building work or supervised someone else carrying out the restricted building work.
Damp proofing ☐		○ Carried out ○ Supervised
Roof cladding or roof cladding system ☑	Fix self supporting roof underlay, roof cladding and flashings as per approved plans	✓ Carried out ✓ Supervised
Ventilation system (for example, subfloor or cavity) ☐		○ Carried out ○ Supervised
Wall cladding or wall cladding system ☐		○ Carried out ○ Supervised
Waterproofing ☐		○ Carried out ○ Supervised
Other ☐		○ Carried out ○ Supervised

ISSUED BY

Name and contact details of the licensed building practitioner who is licensed to carry out or supervise restricted building work.

Name: Hamish Robinson	LBP number: BP104257
Class(es) licensed in:	
R2 Roofing	
Plumbers, Gasfitters and Drainlayers registration number (if applicable):	
Mailing address (if different from below):	
Street address/Registered office: 99 Corbetts Road	
Suburb: RD7	Town/City: Christchurch
PO Box/Private Bag	Postcode:
Phone number:	Mobile: 021 165 1682
After hours:	Fax:
Email address: improve@xtra.co.nz	Website:

DECLARATION

I Hamish Robinson carried out or supervised the restricted building work recorded on this form.

Signature: [signature]

Date: 20·5·21

HDC Approved Consent Document (In accordance with BA 2004, Cl. 49(1)) - Processed by : Milly Perkins - BC No. 200465B

MiTek New Zealand Limited

Correspondence from : **AUCKLAND**
40 Neales Road, East Tamaki 2013
PO Box 58-014, Botany 2163
Phone: 09 274 7109
Fax: 09 274 7100

CHRISTCHURCH
14 Pilkington Way, Wigram 8042
PO Box 8387, Riccarton 8440
Phone: 03 348 8691
Fax: 03 348 0314

www.miteknz.co.nz

PRODUCER STATEMENT for MiTek 20/20® TRUSS DESIGN - Version 4.7

ISSUED BY: **MiTek New Zealand Limited**

TO: **PlaceMakers - Frame & Truss**

IN RESPECT OF: **MiTek® Truss Designs**

This producer statement covers the MiTek 20/20® truss design and the structural performance of the GANG-NAIL® connector plate for the job reference **198239A** and may be used by a Building Consent Authority to assist in determining compliance with the New Zealand Building Code.

The MiTek 20/20® truss design program has been developed by MiTek New Zealand Limited for the design of MiTek® timber roof, floor and attic trusses in New Zealand. The truss designs computed by MiTek 20/20 ® are prepared using sound and widely accepted engineering principles, and in accordance with compliance documents of the New Zealand Building Code and Verification Method B1/VM1; and internationally accepted standard ANSI/TPI 1 - 2002 as an alternative solution, to satisfy the requirements of Clause B1 of the New Zealand Building Code.

On behalf of MiTek New Zealand Limited, and subject to:

i) All proprietary products meeting their performance specification requirements
ii) The provision of adequate roof bracing and overall building stability
iii) Correct selection and placement of GANG-NAIL connector plates
iv) Correct input of Truss Design Data as shown in the Fabricator Design Statement for this job
v) The design being undertaken by the accredited fabricator under the terms of the software licence
vi) Timber is graded to the requirements of NZS 3603:1993
vii) Minimum timber treatment for these MiTek® trusses shall be in accordance with B2/AS1 Table 1A and the relevant sections of NZS 3602:2003

I believe on reasonable grounds that the trusses, if constructed in accordance with the MiTek 20/20® truss design and shop drawings, will comply with the relevant provisions of the New Zealand Building Code.

MiTek New Zealand Limited holds a current policy of Professional Indemnity Insurance no less than $500,000.

On behalf of MiTek New Zealand Limited, **Date: Thursday, 29 April 2021**

In Ling Ng, BE (Hons), CPEng, IntPE, MIPENZ (ID: 146585)
TECHNICAL SERVICES MANAGER, MiTek New Zealand Limited

HDC Approved Consent Document (In accordance with BA 2004, Cl. 49(1)) - Processed by : Milly Perkins - BC No. 200465B

PlaceMakers Know how. Can do. | FRAME & TRUSS

Amened Truss Layout

Asbuilt Layout

Roof Pitch	25.000
Roof Material	Galv Iron .5mm
TC Restraints	900
Overhang	600
Wind Zone	High
Roof Snow	0.441
BC Restraints	600
Ceiling Material	Metal battens fixed to BC

Trusses And Rafters At 900 Centres
Unless Stated Otherwise

Fixings

- = CT200 (LH & RH) Pair
- = 9kN TTP
- = 16kN TTP
- = 47x90 JH
- = 47x120 JH
- = 47x190 JH
- = 95x165 JH
- = Multigrips
- = SBS400
- = Split Hanger SP180
- = Nail On Plate

Wiredogs Fixing Per Drawing\Note Below

Please contact PlaceMakers Frame & Truss Manufacturing if any on site remedial work is required.There will be no compensation for work done without PlaceMakers Frame & Truss Manufacturing written authority.

Job No.	198239
Job Name	Trident Homes North
Address	Olliver Residence 4 Pukeko Way Amberley
Consent #	BC200465A

Drawn	Nick Bishop
Date	9 Apr,2021
Main Ph	03-359-9560
Cell Ph	0277223400
Email	nick.bishop@placemakers.co.nz

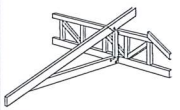

All Jack truss to truss fixings not indicated on the layout are to be fixed with a pair of 90mm nails.

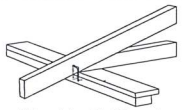

All truss to top plate fixings not indicated on the layout are to be fixed with 2/100 x 3.75 skewed nail + 2 wire dogs.

Note: Where Internal Load-Bearing Walls are shown on layout Fixings required to all Trusses.

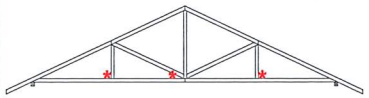

Trusses need bottom chord Restraints at
* 1800 Centres
if Rondo Metal Battern Clip System used [Not Directly Fixed]

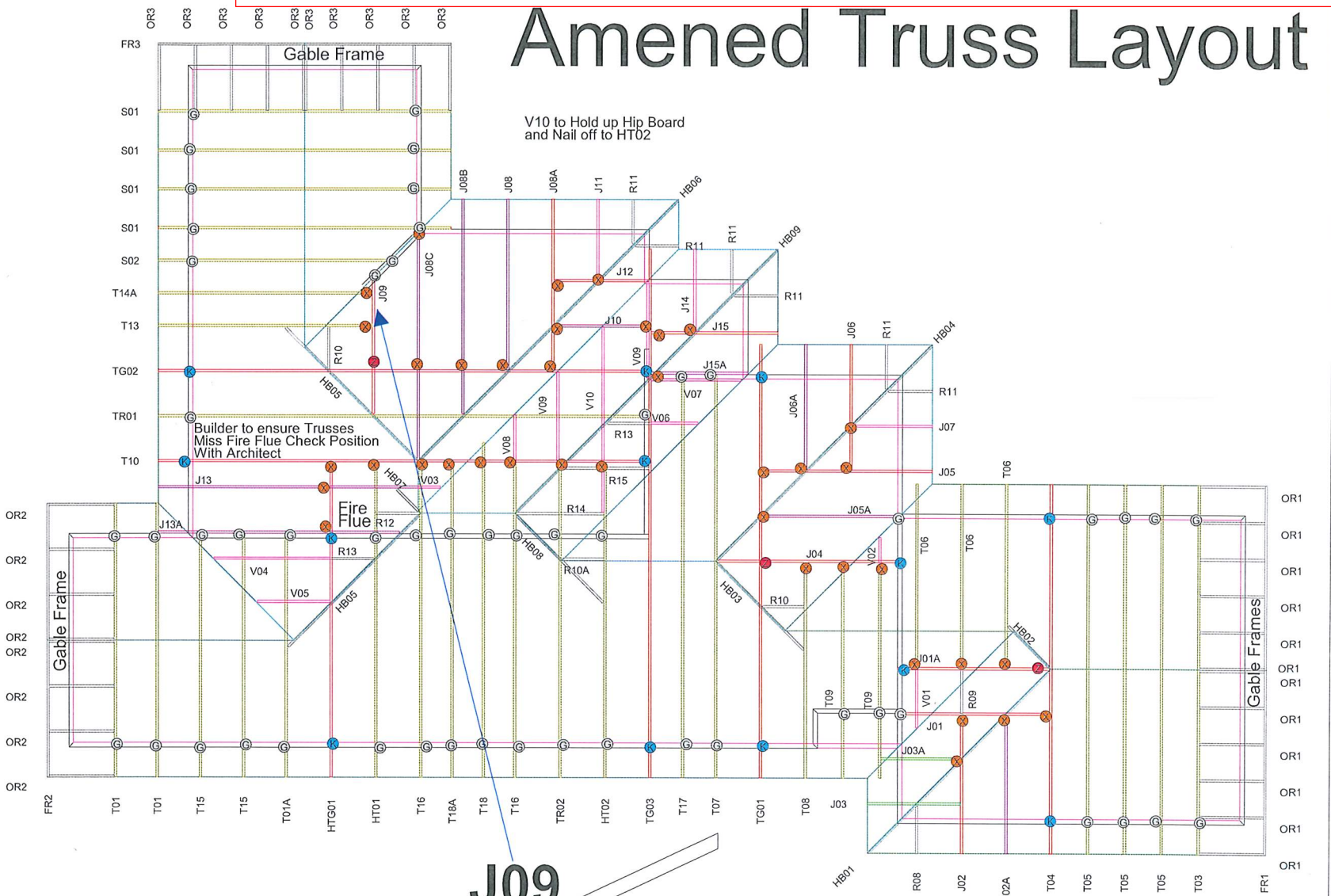

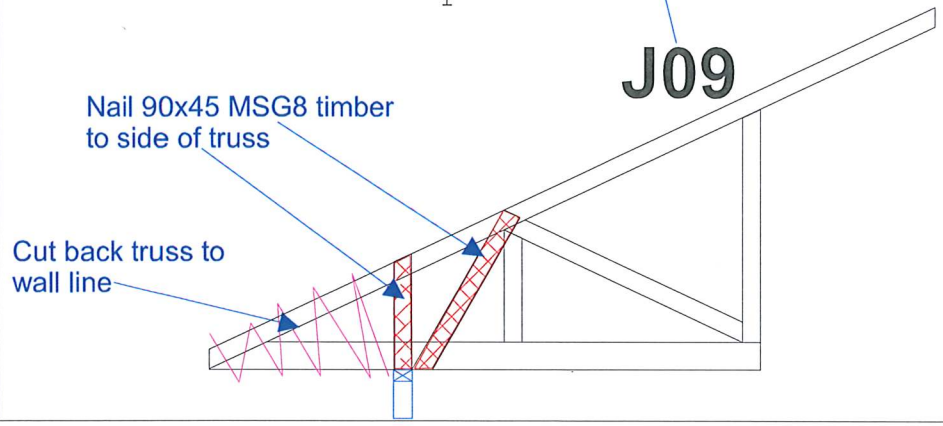

HDC Approved Consent Document (In accordance with BA 2004, Cl. 49(1)) - Processed by : Milly Perkins - BC No. 200465B

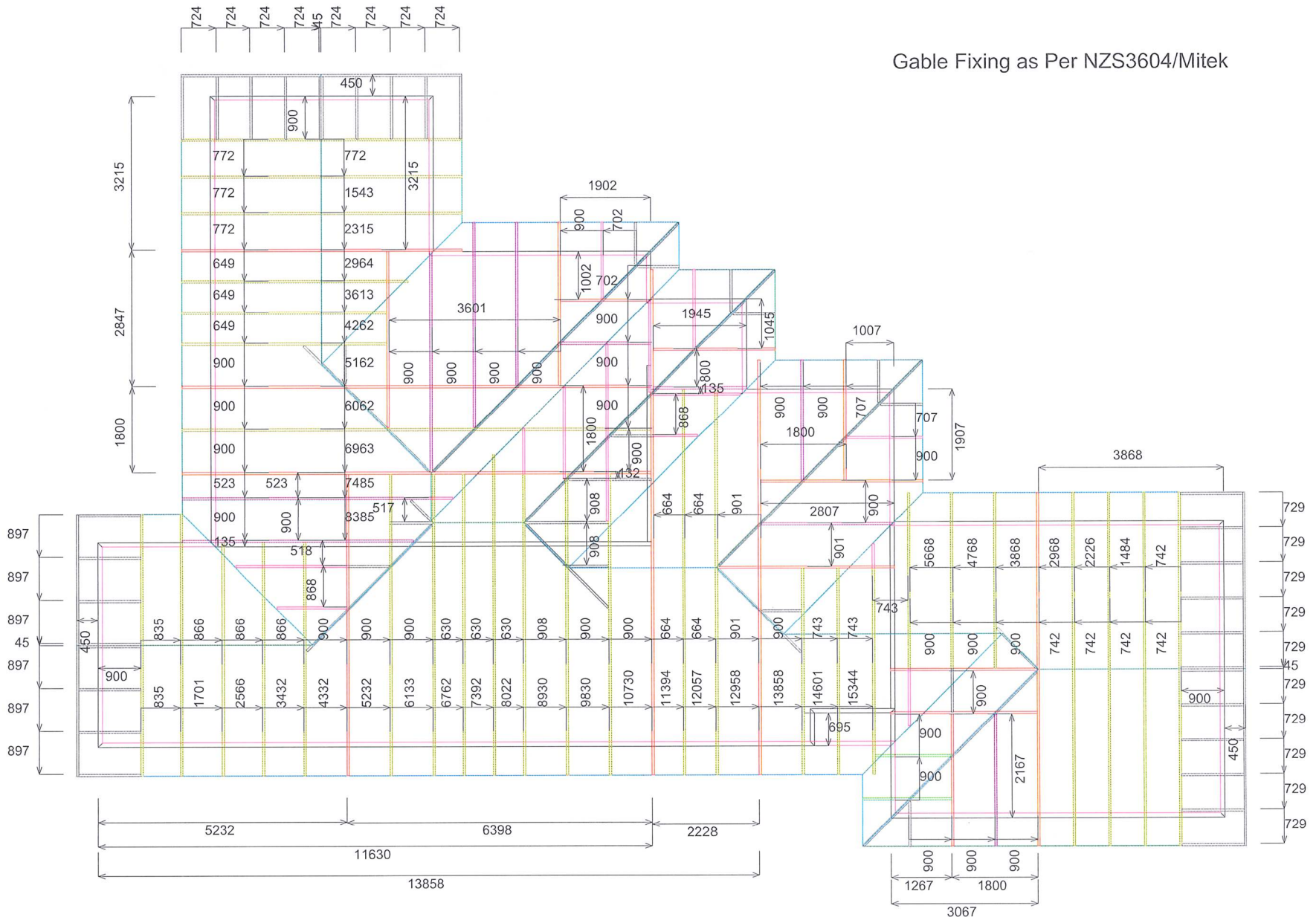
Gable Fixing as Per NZS3604/Mitek
724
724
724
724
45
724
724
724
724
450
900
772
772
772
649
649
649
900
900
900
523
900
135
772
1543
2315
2964
3613
4262
5162
6062
6963
7485
8385
3215
3215
2847
1800
517
518
868
523
1902
900
702
1002
702
900
3601
900
900
900
900
900
1945
1045
1800
135
900
868
1800
900
132
1007
900
900
707
707
1800
900
1907
3868
2807
900
664
664
901
908
908
901
5668
4768
3868
2968
2226
1484
742
729
729
729
729
729
45
729
729
729
729
729

HDC Approved Consent Document (In accordance with BA 2004, Cl. 49(1)) - Processed by : Milly Perkins - BC No. 200465B

Job: 198239A
Client: PlaceMakers Christchurch
Phone:
Site: Trident Homes North
Olliver Residence
4 Pukeko Way
Amberley
Phone:
Description:
Building Consent No.: BC200465A

MITEK FABRICATOR DESIGN STATEMENT

This statement is issued by MiTek accredited fabricator **PlaceMakers - Frame & Truss**, being licensed to use the MiTek 20/20® software, to the client listed above and may be used by the Building Consent Authority to assist in determining compliance with the New Zealand Building Code.

MiTek 20/20® TRUSS DESIGN DATA

The MiTek 20/20® computer design for this job is based on the following design parameters entered into the program. The Fabricator shall ensure that these job details are current and relevant to the project for the design of the MiTek ® trusses.

Job Details

Roof Truss

Timber Group:	Ikiop	Importance Level :	2	Design Working Life :	50 years
Roof		**Ceiling**			
Material:	Galv Iron .5mm	Material:	Metal battens fixed to BC	**Wind**	
Dead Load:	0.210 kPa	Dead Load:	0.200 kPa	Area:	High (44.0 m/s)
Restraints:	900 mm centres	Restraints:	600 mm centres	Pressure Coeff:	Cpe = varies; Cpi = -0.30, 0.20
Live Load:	Qur = 0.250 kPa Qc = 1.100 kN	Live Load:	Qc = 1.400 kN	**Snow**	
				Location:	Amberley (N4) at 100 m
				Open Ground Load:	0.900 kPa
				Basic Roof Load:	0.441 kPa

Pitch: 25.000 deg
Nominal Overhang: 600 mm

The minimum timber treatment for these MiTek® trusses shall be in accordance with B2/AS1 Table 1A and the relevant sections of NZS 3602:2003. The timber for these MiTek® trusses shall be graded to the requirements of NZS 3603:1993. Proprietary fixings and timber connectors shall be selected in accordance with NZS3604:2011 Section 4 - Durability.

MiTek® Truss List

Legend: * = detail only, ? = input only, ~~Txx~~ = failed design, Ø = non certified, Unmarked trusses = designed successfully, LB = lateral bracing required GB = gable brace required, CF = Chemical Free Treatment

Roof Truss

Treatment: Top Chords - H1.2 Bottom Chords - H1.2 Webs - H1.2

Truss	Qty	Span (mm)	Pitch (deg)	Spacing (mm)
S01	4	4680	25.000	900
S02	1	4121	25.000	900
*T02	1	4500	10.000	900

Roof Truss quantity : 6

Total quantity : 6

The computer design input has been carried out by:

Signed: .....

Date: ...Thursday, 29 April 2021....

Name of Detailer: Mark Strawbridge

Qualifications and Title: Detailer

On behalf of: **PlaceMakers - Frame & Truss**

PlaceMakers® Know how. Can do. FRAME & TRUSS

Producer statement construction (PS3)

All sections of this PS3 must be completed

Tick applicable Contractor for:

☐ Building	☐ Emergency Lighting	☐ Cladding	☐ Escalator
☒ Waterproof Membranes	☐ Drain layer	☐ Fire Alarm	☐ Lift
☐ Mechanical (HVAC)	☐ Solar Heating	☐ Other (specify):	

Author name:
Daniel O'Neill

Author company:
Total Tile Installation Limited

Site address:
Lot 25, 4 Pukeko Way, Amberley

Description of building work:
Waterproof membrane to bath surround only.

Owners Details:
Steven Lloyd Olliver, Wendy Joy Anne Olliver

Scope of work covered by statement:

System/Product used (if applicable):
Mapei Aqua defense

I Total Tile Installation Ltd. have been engaged by NM Build Ltd

part ☒ all ☐

As specified in the attached particulars of Building Consent Number: BC200465 and its attached conditions and am satisfied on reasonable grounds that the building work specified above has been completed to the extent required by that Building Consent and complies with the Building Consent.

NZBC clauses:
[select as applicable]

☐ B1	☐ B2	☐ C1	☐ C2	☐ C3	☐ C4	☐ C5	☐ C6	☐ D1	☐ D2	☐ E1	☐ E2
☒ E3	☐ F1	☐ F2	☐ F3	☐ F4	☐ F5	☐ F6	☐ F7	☐ F8	☐ G1	☐ G2	☐ G3
☐ G4	☐ G5	☐ G6	☐ G7	☐ G8	☐ G9	☐ G10	☐ G11	☐ G12	☐ G13	☐ G14	☐ G15
☐ H1											

I understand that this Producer Statement, if accepted, may be relied on by the Council for the purpose of establishing compliance with the Building Consent.

Registration No: Or ☐ N/A

MPNZ 1283

Qualifications/Experience:

MAPEI WET AREA APPROVED APPLICATOR

Address:	Postcode:
Rata Street, Rangiora	7400

Phone:	Fax:

Mobile:	Email:
02 21272 502	ttinstallation@gmail.com

Signature:	Date:
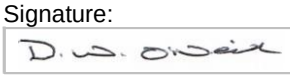	28.07.2021

HURUNUI DISTRICT COUNCIL
P.O. Box 13 | Amberley | 7441 | 66 Carters Road | Amberley | 7410
Phone 03 314-8816 | Fax 03 314-9181 | Email info@hurunui.govt.nz
Web hurunui.govt.nz | facebook.com/HurunuiDistrictCouncil
Skype hdc_customer_services | twitter.com/hurunuidc

Form 7

Code Compliance Certificate

Section 95, Building Act 2004

The building:

Street address of building: 4 Pukeko Way, Amberley
Legal description of land where building is located: LOT 25 DP 488914
Building name:
Location of building within site/block number:
Level/unit number:
Current, lawful established, use: Detached Dwelling
Year first constructed: 2020

The owner:

Name of owner: Olliver Steven Lloyd & Olliver Wendy Joy Anne
Contact person: Peter Nisbet
Mailing address: 19 South Crescent, RD 1, Amberley 7481
Street address/registered office:
Phone number: Daytime: Mobile: 0272364922
Landline: 033759020 Fax number:
Email: wendyolliver62@yahoo.com.au Website:
First point of contact for communications with the council/building consent authority:
Full Name: NM Build Ltd t/a Trident Homes Christchurch
Mailing Address: PO Box 76178, Northwood, Christchurch 8548
Phone: 0274888201: 033759020
Email: pnisbet@tridenthomes.nz

Building work:

Building consent number: 200465
Project: New residential dwelling
Issued by: Hurunui District Council

Code Compliance:

The building consent authority named below is satisfied, on reasonable grounds, that –

(a) The building work complies with the building consent

Signature: Position: Building Administration Officer

On behalf of: Hurunui District Council Date: 14/09/21

HURUNUI DISTRICT COUNCIL
P.O. Box 13 | Amberley | 7441 | 66 Carters Road | Amberley | 7410
Phone 03 314-8816 | Fax 03 314-9181 | Email info@hurunui.govt.nz
Web hurunui.govt.nz | facebook.com/HurunuiDistrictCouncil
Skype hdc_customer_services | twitter.com/hurunuidc

FORM 6
CODE COMPLIANCE CERTIFICATE APPLICATION
Section 92, Building Act 2004

APPLICATION

Building Consent No : **200465** Consent issued by Hurunui District Council

THE OWNER		AGENT – APPLICANT N/A ☐ *(leave section blank)*	
Owner's Name :	StevenLOlliver&WendyJAOlliver	Agent's Name :	NM Build Ltd t/a Trident Homes Christchurch North
Contact Person : (if owner is not an individual)	Steven Olliver	Contact Person :	Peter Nisbet
Mailing Address :	19 South Crescent Amberley	Mailing or Billing Address :	PO Box 76-178 Northwood Christchurch
Postcode :	7410	Postcode :	8548
Street Address or Registered Office :		Street Address or Registered Office :	756 Main North Road Belfast Christchurch
Postcode :		Postcode :	8051
Mobile Phone :	027 236 4922	Mobile Phone :	0274 888 201
Phone :		Phone :	03 375 9020
After Hours Phone :		After Hours Phone :	
Landline number :		Landline number :	
Daytime phone :		Daytime phone :	
Fax number :		Fax number :	
E-mail Address :	wendyolliver62@yahoo.com.au	E-mail Address :	pnisbet@tridenthomes.nz
Website :		Website :	www.tridenthomes.nz

Note – The Agent (if appointed) will be the first point of contact for communications with the Council / Building Consent Authority regarding this application / building work and will receive all correspondence including all invoices

The Code Compliance certificate should be sent to : ☐ Owner ☐ Agent

All building work carried out under the above Building Consent was completed on - Date : 02/08/2021

The following evidence of ownership is attached to this application : ☐ Certificate of Title
☐ Sale and Purchase Agreement (only if new purchase)

SIGNATURE

I request that the Hurunui District Council Building Consent Authority issue a Code Compliance Certificate for this work (under section 95 of the Building Act 2004)

Signature of owner / or agent on behalf of and with the authority of the owner :

☐ Owner ☐ Agent Date : 27thMay2021

Note : If acting "for and on behalf", please read the following declaration before signing :

"I hereby declare that I am authorised to act as Agent of the Owner"

THE PERSONNEL WHO CARRIED OUT WORK OTHER THAN RESTRICTED BUILDING WORK	
Name of Builder : Camel Construction Postal Address : 78 Cainbrea Drive, Christchurch E-mail Address : tim@camelconstruction.co.nz	Phone Number : 021 749 374 Registration Number : 104038
Name of Craftsman Plumber : Signature Plumbing Ltd Postal Address : 143 Mandeville Road, R D 2, Kaiapoi E-mail Address : signatureplumbing@xtra.co.nz	Phone Number : 027 618 9764 Registration Number : 16161
Name of Craftsman Gasfitter : The Gas Guys Postal Address : 386 High Street, Rangiora E-Mail Address : admin@gasguys.co.nz	Phone Number : 03 310 6810 Registration Number : 21905
Name of Registered Drain-layer : Pipe Rite Drainage Postal Address : 83 Youngs Road, RD1, Rangiora E-mail Address : office@piperite.co.nz	Phone Number : 021 229 3015 Registration Number : 18538
Name of Electrician : EziBreeze Ltd Postal Address : PO Box 705, Rangiora E-mail Address : sharon@ezibreeze.co.nz	Phone Number : 03 313 5966 Registration Number : E267187
Name of soild / liquid fuel burner installer : Postal Address : E-mail Address :	Phone Number : Registration Number :
Name of other Contractor / Tradesperson : Postal Address : E-mail Address :	Phone Number : Registration Number :
Add any additional persons on another (separate) sheet.	

ATTACHMENTS

The following supporting documents are attached to this application :

- ☐ Certificates / other documents from the personnel who carried out the work
- ☐ Certificates that relate to the energy work
- ☐ Evidence that Specified Systems are capable of performing to the performance standards set out in the building consent
- ☐ Memoranda from Licensed Building Practitioner(s) stating what Restricted Building Work they carried out or supervised

Notes by applicant: (Other notes or comments which you as the applicant may wish to add)

RESTRICTED BUILDING WORK

Did the Building Consent work include any restricted building work ☐ Yes ☐ No

If yes, provide the following details of all licensed building practitioners who were involved in the carrying out or supervising the restricted building work

Licensing Class	Name and address	Licensed building practitioner number (or registration number treated as being licensed under section 291 of the building Act 2004)	Description of particular work carried out or supervised
Foundations	Concrete Contractors Ltd	136689	
Carpentry	Camel Construction	104038	
Exterior Plasterer	Service Plus Install	BP132938	
Brick-layer			
Block-layer			
Roofer	Stratco	BP104257	

SPECIFIED SYSTEMS

Are there specified systems associate with this project? ☐ Yes (as listed below) ☐ No

The following specified systems are contained on the compliance schedule for the building and, in the opinion of the personnel who installed them, are capable of performing to the performance standards set out in the building consent.

SS1 Automatic systems for fire suppression
SS2 Emergency warning systems
SS3/1 Automatic doors
SS3/2 Access controlled doors
SS3/3 Interfaced fire or smoke doors and / or w indows
SS4 Emergency lighting systems
SS5 Escape route pressurisation systems
SS6 Riser Mains
SS7 Automatic back flow preventers
SS8/1 Passenger carrying lifts
SS8/2 Service lifts
SS8/3 Escalator and moving walks
SS9 Mechanical ventilation or air conditioning systems
SS10 Building maintenance units
SS11 Laboratory fume cupboards
SS12/1 Audio loops
SS12/2 FM radio and infrared beam transmission systems
SS13/1 Mechanical smoke control
SS13/2 Natural smoke control
SS13/3 Smoke curtains
SS14/1 Emergency power systems
SS14/2 Sign44s for SS1-13
SS15/1 Spoken information intended to facilitate evacuation
SS15/2 Final exits
SS15/3 Fire separations
SS15/4Signs for facilitating evacuation
SS15/5 Smoke separations
SS16 Cable cars

Additional Information to Note

1. A final inspection must have been completed prior to this application being sought.
2. The Code Compliance Certificate will be based on the approved building consent documents, so any variations to the original approved plans are required to be documented and approved prior to the work being carried out.
3. A Code Compliance Certificate will not be issued until all of the information required on this form that is relevant to the job is provided to the Council. This includes all names, certificates from personnel who carried out the work, registration numbers, producer statements, or any other required documents

Consent No: **200465**
Applicant: **NM Build Ltd t/a Trident Homes Christchurch**
Site Address: **4 Pukeko Way, Amberley**
Work Type: **New residential dwelling**

Inspection Type: **Drains**
Inspection Outcome: **Pass**
Inspected By: **Mark Milnes**
Inspection Date: **15 April 2021 11:57 a.m.**
Duration: **45 minutes**

Inspection Element	Status
General	Pass
Inspection carried out	Pass
Approved plans reviewed ***Yes - Approved documents onsite checked***	Pass
Warnngs and Bans	Pass
Inspection Photos	Pass
Drainlayer details	Pass
Drainlayer registration number **D Williams #18538**	Pass
Sewerage	Pass
Drain Material **PVC**	Pass
Gradients **>1 in 100**	Pass
Inspection Points **In place where required**	Pass
Bedding Material **20mm chip**	Pass
Cover **>375mm**	Pass
Lateral Connection **Connection with pump chsmber in place**	Pass
Joint Test **Sighted**	Pass
Main Vent size/location **100mm stub-up(s) in place as drawn**	Pass
Branch Vent size/location	N/A
Septic Tank Type	N/A
Septic Tank Location	N/A
ECAN Effluent approved	N/A
Effluent Location	N/A
Effluent Type	N/A
Stormwater	Pass
Drain Material **PVC**	Pass
Gradients **>1 in 100**	Pass
Inspection Points **In place where required**	Pass
Bedding Material	Pass

20mm chip	
Cover **>375mm**	Pass
Lateral Connection **Storm water to soak hole**	Pass
Soak Pit sizes **Sufficient volume for catchment** **2.5 x 3.0 x 2m deep**	Pass
Soak Pit filter cloth **In place to sides & top of pit as reqd**	Pass
Soak Pit Locations **Suitable locations**	Pass
Gutter Sizes and Overflows	N/A
Downpipe Positions **positioned as per plans**	Pass
Deck Drains	N/A
Internal Deck Overflows	N/A
Internal Deck Overflows	N/A
Bubble-up Sumps	N/A

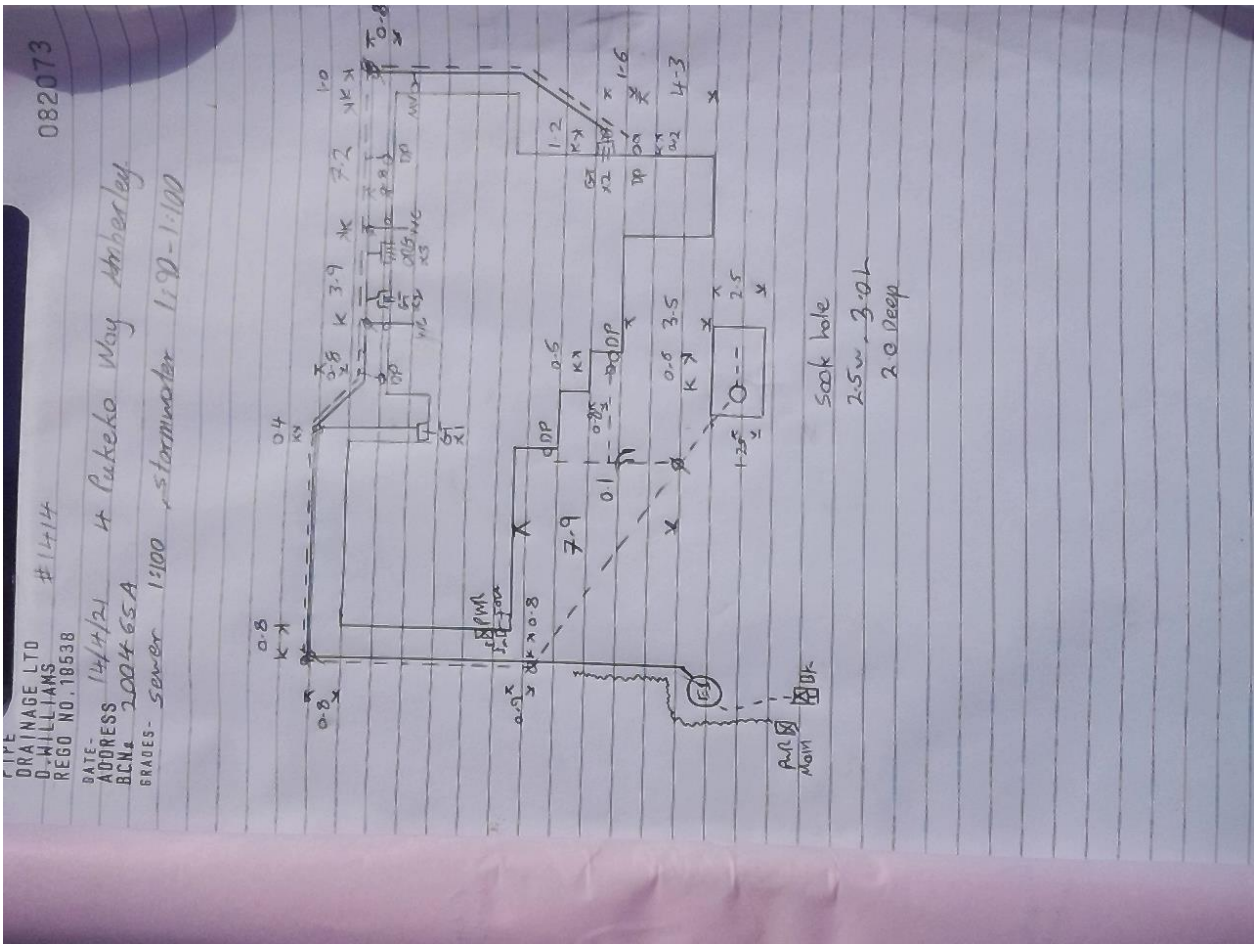

as laid
Taken at 11:34 AM on Thursday 15/04/2021



east
Taken at 11:37 AM on Thursday 15/04/2021



rodding point
Taken at 11:38 AM on Thursday 15/04/2021



rodding point & IP south east cnr
Taken at 11:39 AM on Thursday 15/04/2021



head of drain
Taken at 11:40 AM on Thursday 15/04/2021



soak pit 2.5m x 3m x 2m deep
Taken at 11:42 AM on Thursday 15/04/2021



pump chamber
Taken at 11:54 AM on Thursday 15/04/2021

GoGet Inspection Audit Report

Consent No: **200465**
Applicant: **NM Build Ltd t/a Trident Homes Christchurch**
Site Address: **4 Pukeko Way, Amberley**
Work Type: **New residential dwelling**

Inspection Type: **Final - Residential**
Inspection Outcome: **Pass**
Inspected By: **Mark Milnes**
Inspection Date: **2 August 2021 11:06 a.m.**
Duration: **60 minutes**

Inspection Element	Status
General	Pass
Inspection carried out	Pass
Approved plans reviewed ***Yes - Approved documents onsite checked***	Pass
Warnngs and Bans	Pass
Inspection Photos	Pass
Exterior	Pass
FFL above GL **Good - sufficient**	Pass
FFL above paving **Good - sufficient - OK**	Pass
Cladding clearances **Good - sufficient for cladding types - OK**	Pass
Flashings correct **All as designed - OK**	Pass
Penetrations sealed **YES - silicone sealed - OK**	Pass
Access level height **<190mm - OK**	Pass
Non-slip access **Boxed ready for broomed/floated concrete**	Pass
Stair/step access, tread/riser/pitch, head clearance	N/A
Handrails/barriers	N/A
Roof fixed sufficiently **Appear adequate**	Pass
Roof penetrations **Boot flashing(s)**	Pass
Snow straps/boards	N/A
Vermin proofing **Gaps sealed as required - OK**	Pass
Effluent field/tank	N/A
S/W discharge location **From DP's through drains to soak-hole(s)**	Pass
S/W sumps/strip drain	N/A
Downpipes clipped **YES - 2 x clips each**	Pass
ORG clipped **150mm clearance & loose grate**	Pass
Gully heights **Min 100mm above natural ground**	Pass

MV/BV size/location **80mm in place as drawn**	Pass
Gas bottle location **All as per gas install standards**	Pass
Weep holes sealed (at gas storage)	N/A
Veneer top vented	N/A
Mechanical vents to exterior **YES - vented to soffit outlets**	Pass
Duct covers installed **YES - exterior grilles in place**	Pass
Soffit lines sealed **YES - all OK**	Pass
Solar panel fitting	N/A
Fire fighting water provided as per consent documents	N/A
Photo Record **YES - All relevant photos taken**	Pass
Interior	Pass
Wet areas sealed **Yes**	Pass
Safety glass installed **Previously checked at Preline**	Pass
Window restraints	N/A
Aluminium joinery ID **Labels fitted - H zoned**	Pass
Ventilation/Light **Natural - sufficient glazing & openings**	Pass
Smoke dectectors **In place where required, tested**	Pass
Impervious flooring **In place where required**	Pass
Stair/step access, tread/riser/pitch, head clearance	N/A
Handrails/barriers	N/A
Gas hob protection **All clearances to combustibles OK**	Pass
Means of heating **Heat pump(s)**	Pass
Heating unit	N/A
Plumbing	Pass
HWC - type/size	N/A
Safe tray installed to HW cylinder	N/A
Seismic restraints	N/A
Mains valves fitted	N/A
Temp valve and temp	N/A
Open vent fitted	N/A
Header tank/safe tray	N/A
Fixtures sealed/connected/vented **All connected, all sealed to walls, AAV's in place as reqd**	Pass
Shower leak test **Tested - all showers watertight**	Pass
Overflow relief	N/A
Water main/isolation valve accessible **In place, access cover in Garage**	Pass
Roof space	Pass

Insulation fitment — Pass
Good cover, tidy, no gaps

Downlight clearance — Pass
Covering allowed

Ducting connected — Pass
YES - all extract vent ducts connected

Underlay fitment/laps — Pass
Fitment & laps OK

Pipework insulated — Pass
Yes

Pipework clipped/supported — Pass
Yes

Amendments/Site Instructions — Pass

As-built building aligns with consent plans/documents — Pass
Yes

Site instructions signed off — Pass
Yes



west
Taken at 10:30 AM on Monday 2/08/2021



west
Taken at 10:30 AM on Monday 2/08/2021



south
Taken at 10:31 AM on Monday 2/08/2021



east
Taken at 10:32 AM on Monday 2/08/2021



north
Taken at 10:33 AM on Monday 2/08/2021



north
Taken at 10:33 AM on Monday 2/08/2021



water shut off
Taken at 10:34 AM on Monday 2/08/2021



gas hobbs
Taken at 10:53 AM on Monday 2/08/2021



heat pump living
Taken at 10:54 AM on Monday 2/08/2021

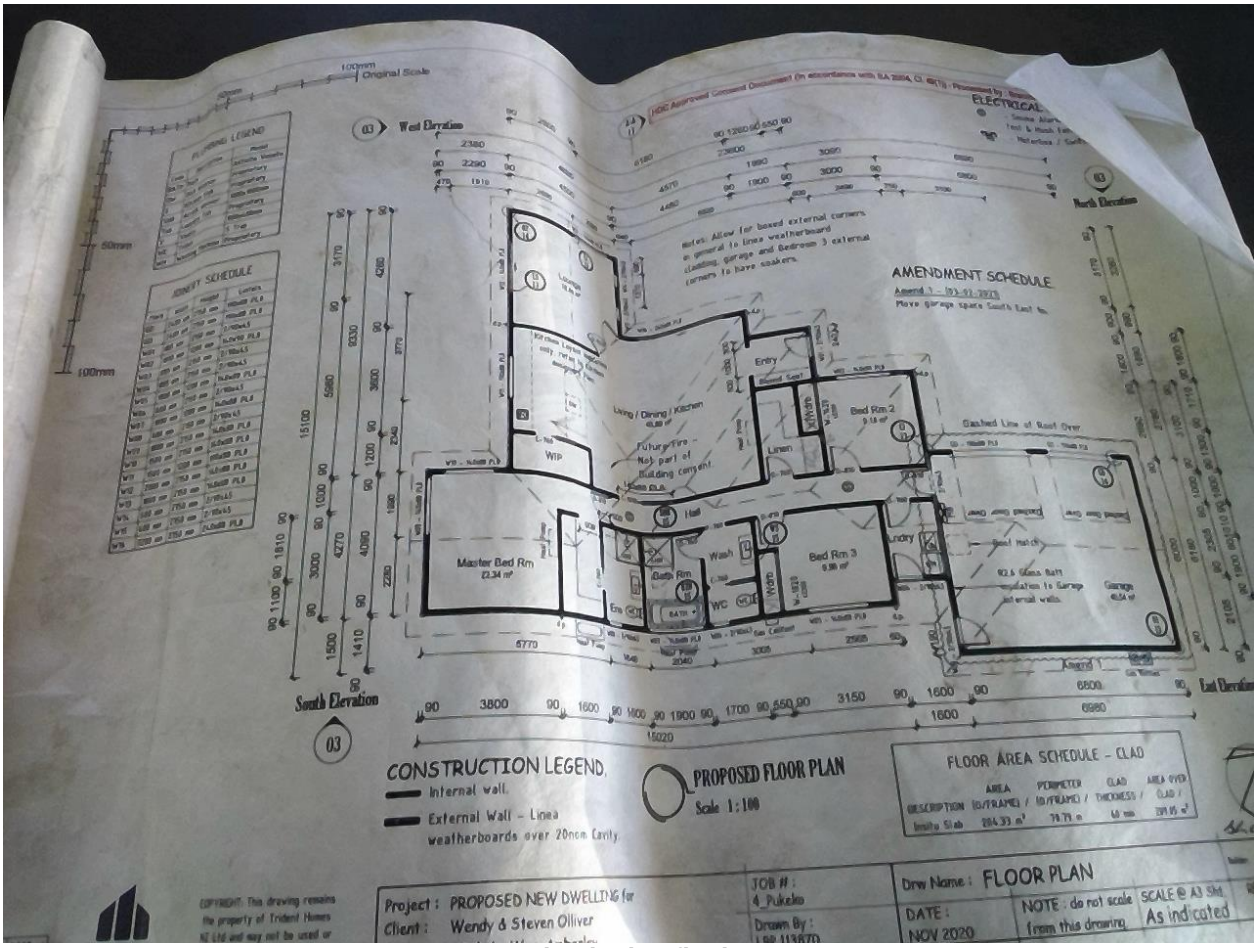

checked at final
Taken at 11:06 AM on Monday 2/08/2021

GoGet Inspection Audit Report

Consent No: **200465**

Applicant: **NM Build Ltd t/a Trident Homes Christchurch**

Site Address: **4 Pukeko Way, Amberley**

Work Type: **New residential dwelling**

Inspection Type: **Foundation - Combined concrete footings & slab**

Inspection Outcome: **Pass Non Compliance**

Inspected By: **Robbie Brannen**

Inspection Date: **30 March 2021 2:42 p.m.**

Duration: **45 minutes**

Inspection Element	Status
General	Pass Non Compliance
Inspection carried out **Inspection carried out** **Compaction Certificate and Concrete load dockets to be provided at or before next inspection**	Pass
Approved plans reviewed ***Yes - Approved documents onsite checked***	Pass
Warnngs and Bans **No banned products used**	Pass
Concrete production **Audited plant - load dockets to be sighted. Spoke to contractor - Concrete supplier - Firth Amberley**	Pass Non Compliance
Engineering inspections carried out (Required items checked)	N/A
Inspection Photos **Taken**	Pass
Site Factors	Pass
Survey Pegs **Sighted - locations OK**	Pass
Siting certifcate required (Required items checked)	N/A
Boundary Clearances **Distances equal to / greater than on plan**	Pass
Site Stability **Level site**	Pass
Ground Bearing **Firm, gravelly soil**	Pass
Vegetation **Stripped - piles of stripped soil on site**	Pass
Excavations	Pass
Horizontal Rods **2 x D16 - as drawn**	Pass
Vertical Rods	N/A
Starters/Floor Ties **D10 @ 600mm crs - as drawn**	Pass
Steel Identified **Seismic 300 E**	Pass
Bottom Cover **>75 & <=100mm**	Pass
Side Cover **>75 & <=100mm**	Pass
Lapping **600mm min**	Pass

Tying **Wire tied - OK**	Pass
Depth **min 300mm as drawn**	Pass
Width **min 240mm**	Pass
Formwork **Constructed timber**	Pass
Level Bottom **Yes - OK**	Pass
Stepped Foundations	N/A
Other items	Pass
Waste Ducts **In place - OK**	Pass
Steel around blockouts	N/A
Drains under building	N/A
Subfloor ventilation	N/A
Engineer Design	N/A
Engineer site inspection required	N/A
Damp Proofing	Pass
DPM **Heavy polythene**	Pass
Lapping/Sealing **Lapped & taped**	Pass
Penetrations **Taped**	Pass
Slab thickness **Nom. 100mm**	Pass
Base Course	Pass
Material **AP40 - some left over on the East side**	Pass
Depth **300 - 600mm**	Pass
Sand Blinding **Yes, Minimum 20mm - some left over on the west side**	Pass
Compaction **Compaction certificate required at or before next inspection**	Pass
Reinforcing	Pass
Mesh size **SE62 500E**	Pass
Mesh lapping **1 1/2 laps**	Pass
Mesh concrete cover **Nom. 30mm**	Pass
Mesh chairs **In place**	Pass
Floor tie lapping **Min. 600mm**	Pass
Floor tie connection	Pass
Supplementary bars **In place as per plan**	Pass
Equipotential Bonding in place **Bonding installed**	Pass
Thickenings	Pass

Depth **100mm below slab**	Pass
Width **Min. 600mm square on site - truss plan 375mm square - ok**	Pass
Horizontal rods **2 x D12 - as drawn each way**	Pass
Links	N/A
Services	Pass
Materials **PVC**	Pass
Gradients	Pass
Sizes	Pass
Sleeving **Foam wrapped & taped**	Pass
Cylinder Drain	N/A
Safe Tray Drain	N/A
Other items	Pass
Bottom plate anchors	N/A
Shrinkage control **Sawcuts made later & supp. bars**	Pass
Heating	N/A
Insulation	N/A



Overview
Taken at 2:39 PM on Tuesday 30/03/2021

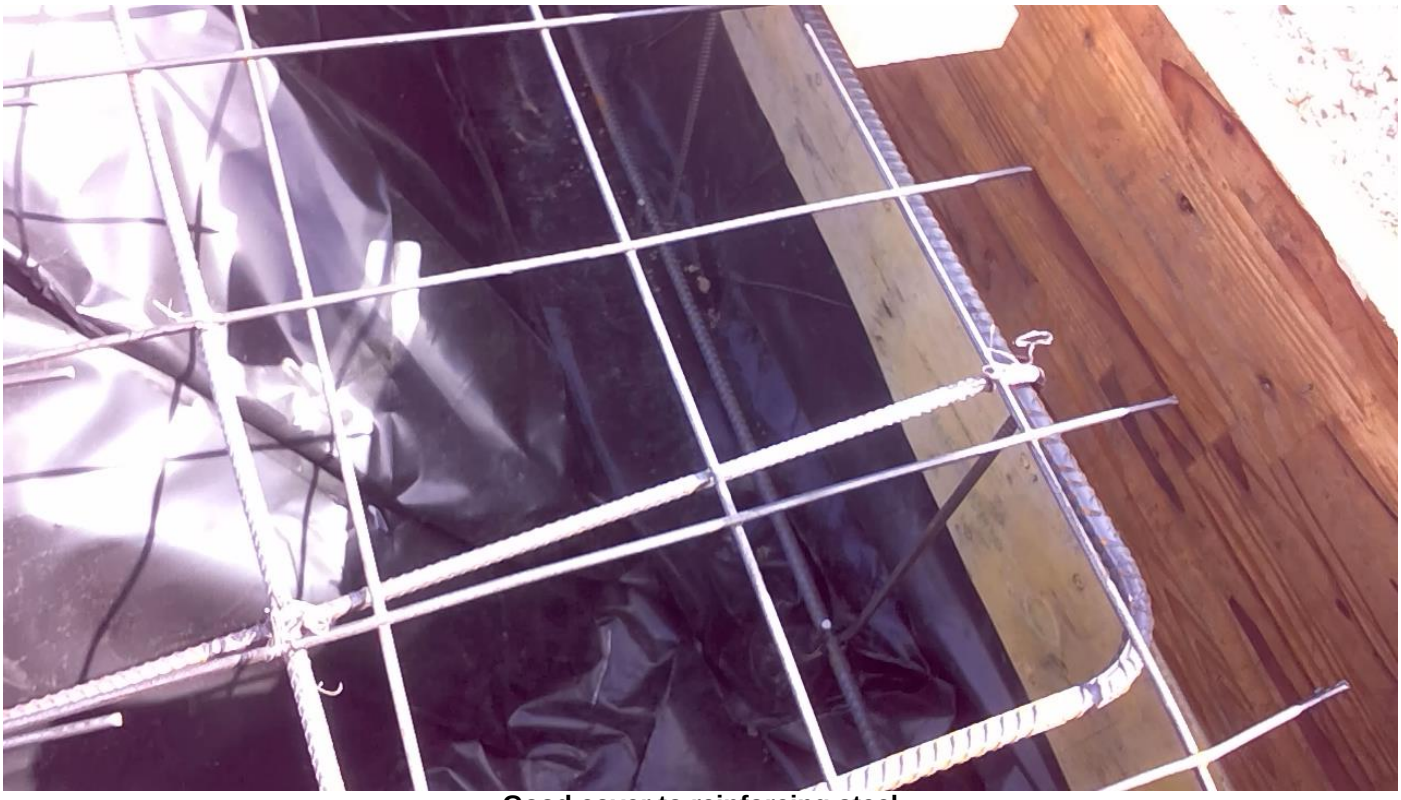

Good cover to reinforcing steel
Taken at 2:40 PM on Tuesday 30/03/2021



Left over sand blinding and corner bars in place as per plan
Taken at 2:40 PM on Tuesday 30/03/2021



Thickening for point load from trusses
Taken at 2:41 PM on Tuesday 30/03/2021



Mesh tag
Taken at 2:42 PM on Tuesday 30/03/2021

GoGet Inspection Audit Report

Consent No: **200465**

Applicant: **NM Build Ltd t/a Trident Homes Christchurch**

Site Address: **4 Pukeko Way, Amberley**

Work Type: **New residential dwelling**

Inspection Type: **Foundation - Combined concrete footings & slab**

Inspection Outcome: **Pass**

Inspected By: **Steven Laird**

Inspection Date: **5 May 2021 11:34 a.m.**

Duration: **15 minutes**

Inspection Element	Status
General	Pass
Concrete production	Pass

Audited plant - load dockets to be sighted. Spoke to contractor - Concrete supplier - Firth Amberley

GoGet Inspection Audit Report

Consent No: **200465**

Applicant: **NM Build Ltd t/a Trident Homes Christchurch**

Site Address: **4 Pukeko Way, Amberley**

Work Type: **New residential dwelling**

Inspection Type: **Pre-Roof**

Inspection Outcome: **Fail**

Inspected By: **Steven Laird**

Inspection Date: **5 May 2021 1:20 p.m.**

Duration: **30 minutes**

Inspection Element	Status
General	Fail
Inspection carried out	Fail

Inspection not carried out - formal amendment required for the change in truss design and bracing design.

Application to be submitted to building@hurunui.govt.nz

GoGet Inspection Audit Report

Consent No: **200465**
Applicant: **NM Build Ltd t/a Trident Homes Christchurch**
Site Address: **4 Pukeko Way, Amberley**
Work Type: **New residential dwelling**

Inspection Type: **Pre-Roof**
Inspection Outcome: **Pass Non Compliance**
Inspected By: **Henry Stikkelman**
Inspection Date: **11 May 2021 3:31 p.m.**
Duration: **60 minutes**

Inspection Element	Status
General	Pass Non Compliance
Inspection carried out **Inspection not carried out.** **Re-inspection required for RAB bracing fixings before joints taped.**	Pass Non Compliance
Approved plans reviewed ***Yes - Electronic documents checked***	Pass
Warnngs and Bans **None**	Pass
Engineering inspections carried out (Required items checked)	N/A
Inspection Photos **Yes, taken**	Pass
Framing	Pass
Timber Species **Douglas Fir generally**	Pass
Timber Grades **SG8 generally**	Pass
Timber treatments **H1.2 throughout**	Pass
Stud sizes **90 x 45mm throughout**	Pass
Stud spacing **600mm centres throughout**	Pass
DPC bottom plates	Pass
Lintel sizes **All as per consent**	Pass
Beam sizes	N/A
Post sizes	N/A
Truss layout	Pass
Truss support **Double top plates - good**	Pass
Girder truss support **Double top plates - good**	Pass
Purlin size/spacing **70 x 45mm SG6 on flat @ 900mm centres**	Pass
Tile Batten size/spacing	N/A
Rafters	N/A
Steel beams	N/A
Portal frames	N/A
Fixings	Pass
Bottom Plates	Pass

M12 galv. Reid bolts @ 1.2m centres ext. & drive pins @ 600mm centres int	
Top plate - stud **Close nailed RAB @ top edge**	Pass
Trusses - top plate **All as per manuf. specs**	Pass
Rafters - top plate	N/A
Purlins/Tile Battens **1 gun nail & 1 blue screw**	Pass
Lintels **All as per manuf. specs**	Pass
Steel angles	N/A
Steel beams	N/A
Portal frames	N/A
Post to foundations	N/A
Post to beams	N/A
Fire wall frames	N/A
Stringers	N/A
Bracing wall and roof	Pass Non Compliance
Location/type **Element e5 & s2 too short**	Pass Non Compliance
Fixing/Connections **Some yet to be completed - o2 & b4**	Pass Non Compliance
Ply nailing **To be completed.** **To be nailed to stud or double stud with Handibrac hold down.** **Some nails driven too deep.**	Pass Non Compliance
Roof bracing **Steel strap cross bracing as spec**	Pass
Dragon ties **In place as drawn**	Pass
Ply treatment	N/A
Flat roof	N/A
Internal gutters	N/A



Interior framing
Taken at 3:16 PM on Tuesday 11/05/2021



Timber stamp
Taken at 3:17 PM on Tuesday 11/05/2021



Brace panel holddowns
Taken at 3:17 PM on Tuesday 11/05/2021



Roof framing
Taken at 3:24 PM on Tuesday 11/05/2021



Roof framing
Taken at 3:26 PM on Tuesday 11/05/2021



Truss fixings
Taken at 3:26 PM on Tuesday 11/05/2021

GoGet Inspection Audit Report

Consent No: **200465**

Applicant: **NM Build Ltd t/a Trident Homes Christchurch**

Site Address: **4 Pukeko Way, Amberley**

Work Type: **New residential dwelling**

Inspection Type: **Pre-Roof**

Inspection Outcome: **Pass Non Compliance**

Inspected By: **Henry Stikkelman**

Inspection Date: **18 May 2021 1:56 p.m.**

Duration: **15 minutes**

Inspection Element	Status
General	Pass Non Compliance
Inspection carried out	Pass Non Compliance
Re inspection carried out.	
OK to continue - Items to be completed to be checked at next inspection.	
Bracing wall and roof	Pass Non Compliance
Location/type	Pass Non Compliance
Element e5 & s2 too short - to be rctified.	
Ply nailing	Pass Non Compliance
To be completed.	
To be nailed to stud or double stud with Handibrac hold down.	



BAB board nailing
Taken at 1:56 PM on Tuesday 18/05/2021



Top nailing
Taken at 1:56 PM on Tuesday 18/05/2021

GoGet Inspection Audit Report

Consent No: **200465**
Applicant: **NM Build Ltd t/a Trident Homes Christchurch**
Site Address: **4 Pukeko Way, Amberley**
Work Type: **New residential dwelling**

Inspection Type: **Pre-Roof**
Inspection Outcome: **Pass**
Inspected By: **Henry Stikkelman**
Inspection Date: **24 May 2021 9:37 a.m.**
Duration: **15 minutes**

Inspection Element	Status
General	Pass
Inspection carried out **Re inspection completed.**	Pass
Bracing wall and roof	Pass
Location/type	Pass
Fixing/Connections **All as drawn**	Pass
Ply nailing **All galv nailed 150mm centres**	Pass

Consent No: **200465**
Applicant: **NM Build Ltd t/a Trident Homes Christchurch**
Site Address: **4 Pukeko Way, Amberley**
Work Type: **New residential dwelling**

Inspection Type: **Pre-Cladding - Mid Cladding**
Inspection Outcome: **Pass**
Inspected By: **Henry Stikkelman**
Inspection Date: **11 June 2021 11:08 a.m.**
Duration: **30 minutes**

Inspection Element	Status
General	Pass
Inspection carried out **Inspection carried out** **OK to continue**	Pass
Approved plans reviewed ***Yes - Electronic documents checked***	Pass
Warnngs and Bans **None**	Pass
Inspection Photos **Yes.**	Pass
Cladding System	Pass
Cladding system installed as per plans/ specs	Pass
Cladding Fixings	Pass
Cavity Batten size **Nom. 40 x 19mm vert. timber (50 x 20)**	Pass
Cavity Batten spacing **600mm centres**	Pass
Cavity Batten treatment **H3.1 timber**	Pass
Vermin proofing **PVC vent strip in place**	Pass
Head flashings **Folded aluminium flashings with stop-ends X 2**	Pass
Sill flashings	N/A
Jamb flashings	N/A
WANZ bars fitted **Fitted to every window & door**	Pass
Photos taken **YES - Any relevant photos taken**	Pass



Head flashing
Taken at 11:04 AM on Friday 11/06/2021



Internal corners
Taken at 11:05 AM on Friday 11/06/2021



West side
Taken at 11:05 AM on Friday 11/06/2021



South side
Taken at 11:06 AM on Friday 11/06/2021



WANZ bars
Taken at 11:07 AM on Friday 11/06/2021

GoGet Inspection Audit Report

Consent No: **200465**
Applicant: **NM Build Ltd t/a Trident Homes Christchurch**
Site Address: **4 Pukeko Way, Amberley**
Work Type: **New residential dwelling**

Inspection Type: **Pre-Line**
Inspection Outcome: **Fail**
Inspected By: **Henry Stikkelman**
Inspection Date: **2 June 2021 11:27 a.m.**
Duration: **45 minutes**

Inspection Element	Status
General	Pass Non Compliance
Inspection carried out **Inspection carried out.** **Okay to line ceilings as metal and top plates < 17%.** **Re-inspection required for moisture content.**	Pass Non Compliance
Approved plans reviewed ***Yes - Electronic documents checked***	Pass
Warnngs and Bans **None.**	Pass
Engineering inspections carried out (Required items checked)	N/A
Building weathertight **Garage doors to be temp sealed.**	Pass Non Compliance
Inspection Photos **Taken.**	Pass
Framing	Fail
Framing Moisture **>20% - drying required**	Fail
Ceiling Batten Material **Steel - Rondo**	Pass
Ceiling Batten Size **Rondo - 35 x 40mm trapezoidal**	Pass
Ceiling Batten Centres **450mm**	Pass
Ceiling Batten Moisture	N/A
Bracing location and type **Previously checked, All as drawn**	Pass
Bracing clear of wet areas	Pass
Bracing fixings/connections **Previously checked, All as drawn**	Pass
Brace openings **All OK**	Pass
Dragon ties	N/A
Diaphragms	N/A
Other	Pass Non Compliance
Fire Walls	N/A
Safety Glazing **In place - as required - OK**	Pass
Window/joinery Rating **Joinery displays correct ID rating for site wind speed**	Pass
Internal Ventilation **Natural - opening windows & doors**	Pass

Metal angle to showers	N/A
Insulation Material **Pink Batts®**	Pass
R Value Walls **>R2.8**	Pass
R Value Ceilings **R4.0 - as designed**	Pass
Insulation Placement **Good - tidy**	Pass
Stair Head Clearance (2m min)	N/A
Opening Air Seals **Bottoms of full height (floor) units to be sealed**	Pass Non Compliance
Water Services	Pass
Pipework **Polybutylene to hot & cold**	Pass
Jointing **Brass, crimped**	Pass
Support/Clipping **Good - secure - OK**	Pass
Lagging	N/A
Shut Off Valve **In place, as required (in Garage)**	Pass
Pressure Test **Carried out - OK- Plumber to supply test declaration.**	Pass
Equipotential Bonding in place **Bonding installed and connected**	Pass
Waste Services	Pass
Pipework **PVC**	Pass
Sizes **All as drawn**	Pass
Support	Pass
Gradients **All in slab - prev. inspected - appear OK**	Pass
Internal AAV's (hidden)	N/A



Bedroom
Taken at 11:22 AM on Wednesday 2/06/2021



En-suite
Taken at 11:23 AM on Wednesday 2/06/2021



Bathroom
Taken at 11:23 AM on Wednesday 2/06/2021



Water pipe work
Taken at 11:24 AM on Wednesday 2/06/2021



Living area
Taken at 11:24 AM on Wednesday 2/06/2021



Insulation R values
Taken at 11:25 AM on Wednesday 2/06/2021



Garage
Taken at 11:26 AM on Wednesday 2/06/2021



Water shut off
Taken at 11:26 AM on Wednesday 2/06/2021

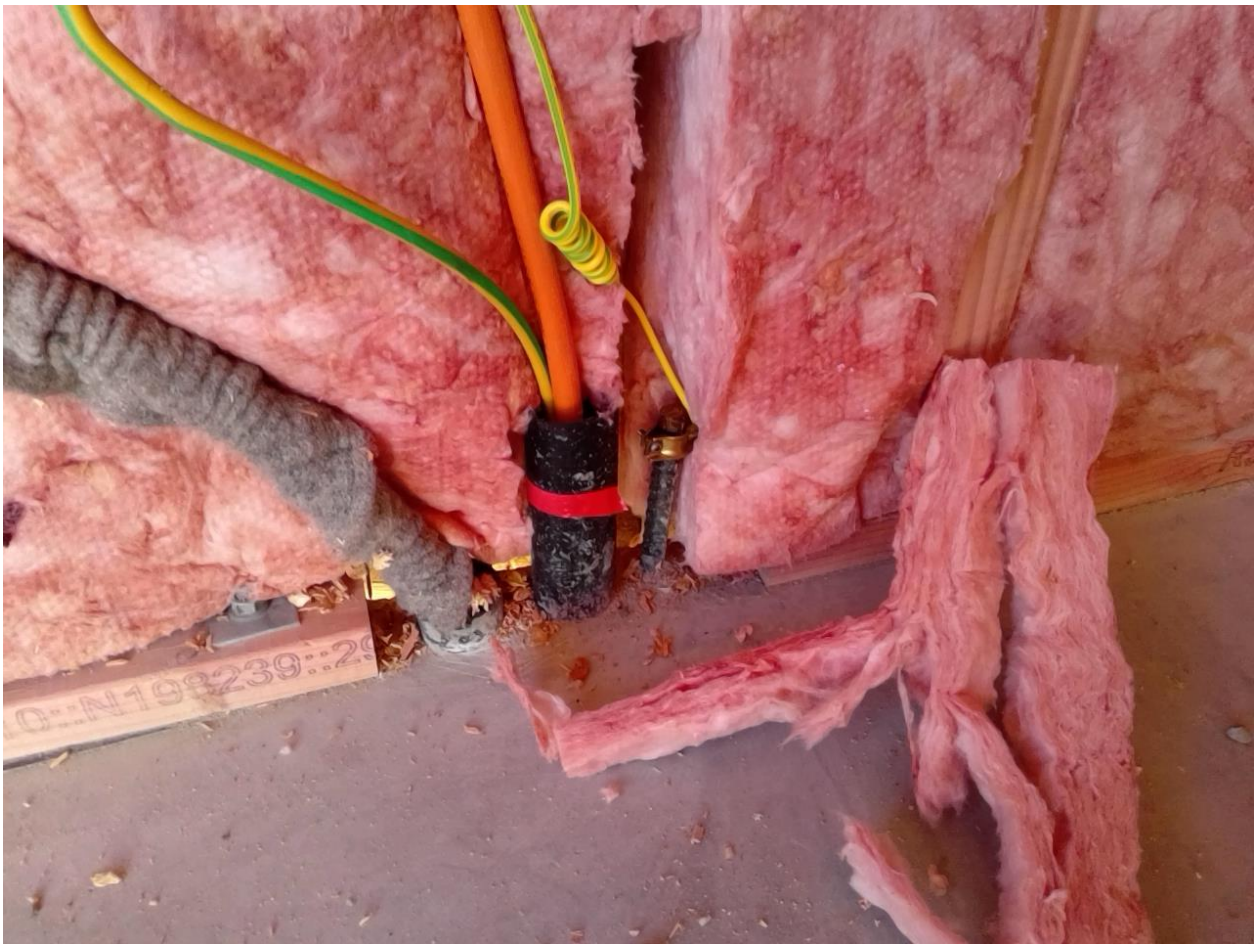

Bonding
Taken at 11:27 AM on Wednesday 2/06/2021

GoGet Inspection Audit Report

Consent No: **200465**

Applicant: **NM Build Ltd t/a Trident Homes Christchurch**

Site Address: **4 Pukeko Way, Amberley**

Work Type: **New residential dwelling**

Inspection Type: **Pre-Line**

Inspection Outcome: **Pass**

Inspected By: **Mark Milnes**

Inspection Date: **4 June 2021 8:38 a.m.**

Duration: **15 minutes**

Inspection Element	Status
General	Pass
Inspection carried out	Pass
Re - inspection carried out. **OK to line**	
Building weathertight	Pass
Garage doors to be temp sealed. **plywood cover - sited at reinspection.**	
Framing	Pass
Framing Moisture	Pass
>20% - drying required **<17% - sited at re-inspection**	
Other	Pass
Opening Air Seals	Pass
Bottoms of full height (floor) units to be sealed **sealed - sited at re-inspection** **Good, tidy**	

GoGet Inspection Audit Report

Consent No: **200465**

Applicant: **NM Build Ltd t/a Trident Homes Christchurch**

Site Address: **4 Pukeko Way, Amberley**

Work Type: **New residential dwelling**

Inspection Type: **Pre-Stop**

Inspection Outcome: **Pass**

Inspected By: **Henry Stikkelman**

Inspection Date: **8 June 2021 1:25 p.m.**

Duration: **30 minutes**

Inspection Element	Status
General	Pass
Inspection carried out **Inspection completed.** **OK to continue**	Pass
Approved plans reviewed ***Yes - Electronic documents checked***	Pass
Warnngs and Bans **None.**	Pass
Inspection Photos **Yes**	Pass
Bracing	Pass
Locations **All as drawn**	Pass
Types **Mixed types (refer plans) - as drawn**	Pass
Ceiling Diaphragms	N/A
Edge Nailing **Wall bracing fixings**	Pass
Holes in elements **All OK**	Pass
Materials	Pass
Wet Areas **GIB "Aqualine"® board 10mm**	Pass
Wet Area Ceilings **GIB "Aqualine"® board 10mm**	Pass
Other Walls **GIB board standard 10mm**	Pass
Other Ceilings **GIB board standard 10mm**	Pass
Fire Walls	N/A



Living area
Taken at 1:24 PM on Tuesday 8/06/2021



Bathroom
Taken at 1:24 PM on Tuesday 8/06/2021



En-suite
Taken at 1:25 PM on Tuesday 8/06/2021



Wall linings
Taken at 1:25 PM on Tuesday 8/06/2021

Hurunui District Council
66 Carters Road
PO Box 13
Amberley 7441
Phone (03) 314 8816

SITE NOTICE

Consent No:	**200465**
Applicant:	**NM Build Ltd t/a Trident Homes Christchurch**
Site Address:	**4 Pukeko Way, Amberley**
Work Type:	**New residential dwelling**
Building Category:	**R1**

Inspection Type:	**Foundation - Combined concrete footings & slab**
Inspection Outcome:	**Pass Non Compliance**
Inspected By:	**Robbie Brannen**
Inspection Date:	**30 March 2021**

Pass Non-Compliance

General

Concrete production	**Audited plant - load dockets to be sighted. Spoke to contractor - Concrete supplier - Firth Amberley**

Passed Items

General

Inspection carried out	**Inspection carried out** **Compaction Certificate and Concrete load dockets to be provided at or before next inspection**
Approved plans reviewed	**Yes - Approved documents onsite checked**
Warnngs and Bans	**No banned products used**
Inspection Photos	**Taken**

Site Factors

Survey Pegs	**Sighted - locations OK**
Boundary Clearances	**Distances equal to / greater than on plan**
Site Stability	**Level site**
Ground Bearing	**Firm, gravelly soil**
Vegetation	**Stripped - piles of stripped soil on site**

Excavations

Horizontal Rods	**2 x D16 - as drawn**
Starters/Floor Ties	**D10 @ 600mm crs - as drawn**
Steel Identified	**Seismic 300 E**
Bottom Cover	**>75 & <=100mm**
Side Cover	**>75 & <=100mm**
Lapping	**600mm min**
Tying	**Wire tied - OK**
Depth	**min 300mm as drawn**
Width	**min 240mm**
Formwork	**Constructed timber**
Level Bottom	**Yes - OK**

Other items	
Waste Ducts	**In place - OK**
Damp Proofing	
DPM	**Heavy polythene**
Lapping/Sealing	**Lapped & taped**
Penetrations	**Taped**
Slab thickness	**Nom. 100mm**
Base Course	
Material	**AP40 - some left over on the East side**
Depth	**300 - 600mm**
Sand Blinding	**Yes, Minimum 20mm - some left over on the west side**
Compaction	**Compaction certificate required at or before next inspection**
Reinforcing	
Mesh size	**SE62 500E**
Mesh lapping	**1 1/2 laps**
Mesh concrete cover	**Nom. 30mm**
Mesh chairs	**In place**
Floor tie lapping	**Min. 600mm**
Floor tie connection	
Supplementary bars	**In place as per plan**
Equipotential Bonding in place	**Bonding installed**
Thickenings	
Depth	**100mm below slab**
Width	**Min. 600mm square on site - truss plan 375mm square - ok**
Horizontal rods	**2 x D12 - as drawn each way**
Services	
Materials	**PVC**
Gradients	
Sizes	
Sleeving	**Foam wrapped & taped**
Other items	
Shrinkage control	**Sawcuts made later & supp. bars**

Support Documentation	**Status**
Application for CCC	Required
Electrical safety certificate (itemised)	Required
Gas safety certificate	Required
As-built drainage plan	Required
Plumbers pressure test declaration	Required
Design statement (truss manufacturer)	Required
Design statement (frame manufacturer)	Required
Under-slab hardfill compaction certificate	Required

Record of Restricted Building Work (LBP #)	**Status**
Designer **Justin hannon - Received**	Accepted
Carpentry	Required
Foundations	Required

Roofing	Required

Hurunui District Council
66 Carters Road
PO Box 13
Amberley 7441
Phone (03) 314 8816

SITE NOTICE

Consent No: **200465**
Applicant: **NM Build Ltd t/a Trident Homes Christchurch**
Site Address: **4 Pukeko Way, Amberley**
Work Type: **New residential dwelling**
Building Category: **R1**

Inspection Type: **Drains**
Inspection Outcome: **Pass**
Inspected By: **Mark Milnes**
Inspection Date: **15 April 2021**

Passed Items

General	
Inspection carried out	
Approved plans reviewed	**Yes - Approved documents onsite checked**
Warnngs and Bans	
Inspection Photos	
Drainlayer details	
Drainlayer registration number	**D Williams #18538**
Sewerage	
Drain Material	**PVC**
Gradients	**>1 in 100**
Inspection Points	**In place where required**
Bedding Material	**20mm chip**
Cover	**>375mm**
Lateral Connection	**Connection with pump chsmber in place**
Joint Test	**Sighted**
Main Vent size/location	**100mm stub-up(s) in place as drawn**
Stormwater	
Drain Material	**PVC**
Gradients	**>1 in 100**
Inspection Points	**In place where required**
Bedding Material	**20mm chip**
Cover	**>375mm**
Lateral Connection	**Storm water to soak hole**
Soak Pit sizes	**Sufficient volume for catchment 2.5 x 3.0 x 2m deep**
Soak Pit filter cloth	**In place to sides & top of pit as reqd**
Soak Pit Locations	**Suitable locations**
Downpipe Positions	**positioned as per plans**

Hurunui District Council
66 Carters Road
PO Box 13
Amberley 7441
Phone (03) 314 8816

SITE NOTICE

Consent No: **200465**
Applicant: **NM Build Ltd t/a Trident Homes Christchurch**
Site Address: **4 Pukeko Way, Amberley**
Work Type: **New residential dwelling**
Building Category: **R1**

Inspection Type: **Drains**
Inspection Outcome: **Pass**
Inspected By: **Mark Milnes**
Inspection Date: **15 April 2021**

Passed Items

General	
Inspection carried out	
Approved plans reviewed	**Yes - Approved documents onsite checked**
Warnngs and Bans	
Inspection Photos	
Drainlayer details	
Drainlayer registration number	**D Williams #18538**
Sewerage	
Drain Material	**PVC**
Gradients	**>1 in 100**
Inspection Points	**In place where required**
Bedding Material	**20mm chip**
Cover	**>375mm**
Lateral Connection	**Connection with pump chsmber in place**
Joint Test	**Sighted**
Main Vent size/location	**100mm stub-up(s) in place as drawn**
Stormwater	
Drain Material	**PVC**
Gradients	**>1 in 100**
Inspection Points	**In place where required**
Bedding Material	**20mm chip**
Cover	**>375mm**
Lateral Connection	**Storm water to soak hole**
Soak Pit sizes	**Sufficient volume for catchment 2.5 x 3.0 x 2m deep**
Soak Pit filter cloth	**In place to sides & top of pit as reqd**
Soak Pit Locations	**Suitable locations**
Downpipe Positions	**positioned as per plans**

Hurunui District Council
66 Carters Road
PO Box 13
Amberley 7441
Phone (03) 314 8816

SITE NOTICE

Consent No: **200465**
Applicant: **NM Build Ltd t/a Trident Homes Christchurch**
Site Address: **4 Pukeko Way, Amberley**
Work Type: **New residential dwelling**
Building Category: **R1**

Inspection Type: **Foundation - Combined concrete footings & slab**
Inspection Outcome: **Pass**
Inspected By: **Steven Laird**
Inspection Date: **5 May 2021**

Passed Items

General

Concrete production	**Audited plant - load dockets to be sighted. Spoke to contractor - Concrete supplier - Firth Amberley**

Inspection Type: **Pre-Roof**
Inspection Outcome: **Fail**
Inspected By: **Steven Laird**
Inspection Date: **5 May 2021**

Failed Items

General

Inspection carried out	**Inspection not carried out - formal amendment required for the change in truss design and bracing design.** **Application to be submitted to building@hurunui.govt.nz**

Hurunui District Council
66 Carters Road
PO Box 13
Amberley 7441
Phone (03) 314 8816

SITE NOTICE

Consent No: **200465**
Applicant: **NM Build Ltd t/a Trident Homes Christchurch**
Site Address: **4 Pukeko Way, Amberley**
Work Type: **New residential dwelling**
Building Category: **R1**

Inspection Type: **Pre-Roof**
Inspection Outcome: **Pass Non Compliance**
Inspected By: **Henry Stikkelman**
Inspection Date: **11 May 2021**

Pass Non-Compliance

General

Inspection carried out	**Inspection not carried out.** **Re-inspection required for RAB bracing fixings before joints taped.**

Bracing wall and roof

Location/type	**Element e5 & s2 too short**
Fixing/Connections	**Some yet to be completed - o2 & b4**
Ply nailing	**To be completed.** **To be nailed to stud or double stud with Handibrac hold down.** **Some nails driven too deep.**

Passed Items

General

Approved plans reviewed	**Yes - Electronic documents checked**
Warnngs and Bans	**None**
Inspection Photos	**Yes, taken**

Framing

Timber Species	**Douglas Fir generally**
Timber Grades	**SG8 generally**
Timber treatments	**H1.2 throughout**
Stud sizes	**90 x 45mm throughout**
Stud spacing	**600mm centres throughout**
DPC bottom plates	
Lintel sizes	**All as per consent**
Truss layout	
Truss support	**Double top plates - good**
Girder truss support	**Double top plates - good**
Purlin size/spacing	**70 x 45mm SG6 on flat @ 900mm centres**

Fixings

Bottom Plates	**M12 galv. Reid bolts @ 1.2m centres ext. & drive pins**

	@ 600mm centres int
Top plate - stud	**Close nailed RAB @ top edge**
Trusses - top plate	**All as per manuf. specs**
Purlins/Tile Battens	**1 gun nail & 1 blue screw**
Lintels	**All as per manuf. specs**
Bracing wall and roof	
Roof bracing	**Steel strap cross bracing as spec**
Dragon ties	**In place as drawn**

Support Documentation	**Status**
Application for CCC	Required
Electrical safety certificate (itemised)	Required
Gas safety certificate	Required
As-built drainage plan	Required
Plumbers pressure test declaration	Required
Design statement (truss manufacturer)	Required
Design statement (frame manufacturer)	Required
Under-slab hardfill compaction certificate	Required

Record of Restricted Building Work (LBP #)	**Status**
Designer	Accepted
Justin hannon - Received	
Carpentry	Required
Foundations	Required
Roofing	Required

Hurunui District Council
66 Carters Road
PO Box 13
Amberley 7441
Phone (03) 314 8816

SITE NOTICE

Consent No: **200465**
Applicant: **NM Build Ltd t/a Trident Homes Christchurch**
Site Address: **4 Pukeko Way, Amberley**
Work Type: **New residential dwelling**
Building Category: **R1**

Inspection Type: **Pre-Roof**
Inspection Outcome: **Pass Non Compliance**
Inspected By: **Henry Stikkelman**
Inspection Date: **18 May 2021**

Pass Non-Compliance

General

Inspection carried out	**Re inspection carried out.** **OK to continue - Items to be completed to be checked at next inspection.**

Bracing wall and roof

Location/type	**Element e5 & s2 too short - to be rctified.**
Ply nailing	**To be completed.** **To be nailed to stud or double stud with Handibrac hold down.**

Support Documentation	Status
Application for CCC	Required
Electrical safety certificate (itemised)	Required
Gas safety certificate	Required
As-built drainage plan	Required
Plumbers pressure test declaration	Required
Design statement (truss manufacturer)	Required
Design statement (frame manufacturer)	Required
Under-slab hardfill compaction certificate	Required

Record of Restricted Building Work (LBP #)	Status
Designer	Accepted
Justin hannon - Received	
Carpentry	Required
Foundations	Required
Roofing	Required

Hurunui District Council
66 Carters Road
PO Box 13
Amberley 7441
Phone (03) 314 8816

SITE NOTICE

Consent No: **200465**
Applicant: **NM Build Ltd t/a Trident Homes Christchurch**
Site Address: **4 Pukeko Way, Amberley**
Work Type: **New residential dwelling**
Building Category: **R1**

Inspection Type: **Pre-Roof**
Inspection Outcome: **Pass**
Inspected By: **Henry Stikkelman**
Inspection Date: **24 May 2021**

Passed Items

General	
Inspection carried out	**Re inspection completed.**
Bracing wall and roof	
Location/type	
Fixing/Connections	**All as drawn**
Ply nailing	**All galv nailed 150mm centres**

Inspection Type: **Pre-Cladding - Wrap**
Inspection Outcome: **Pass Non Compliance**
Inspected By: **Henry Stikkelman**
Inspection Date: **24 May 2021**

Pass Non-Compliance

General	
Inspection carried out	**Inspection carried out. OK to continue.**
Flashings	
Meter box flashing	**Not yet installed**

Passed Items

General	
Approved plans reviewed	**Yes - Electronic documents checked**
Warnngs and Bans	**None**
Inspection Photos	**Yes, taken**
Wrap/tape	
Wrap/Barrier type	**IBS RidgeRAP**
Wrap/Barrier fixing	**Good - well fixed**
Wrap overhang to founds	
Sill tape type	**"Protecto Sill" flashing tape system throughout (BRANZ No. 450)**
Roof Underlay	**Thermakraft 213 bituminous self supporting**

Flashings

Flashing tape sill fixing	**Full length as per manuf. specs**
Flashing tape head fixing	**Full length as per manuf. specs**
Flashing tape jamb fixing	**Full length as per manuf. specs**
Wrap Penetrations	**Taped & sealed appropriately**

Support Documentation	**Status**
Application for CCC	Required
Electrical safety certificate (itemised)	Required
Gas safety certificate	Required
As-built drainage plan	Required
Plumbers pressure test declaration	Required
Design statement (truss manufacturer)	Required
Design statement (frame manufacturer)	Required
Under-slab hardfill compaction certificate	Required

Record of Restricted Building Work (LBP #)	**Status**
Designer **Justin hannon - Received**	Accepted
Carpentry	Required
Foundations	Required
Roofing	Required

Hurunui District Council
66 Carters Road
PO Box 13
Amberley 7441
Phone (03) 314 8816

SITE NOTICE

Consent No: **200465**
Applicant: **NM Build Ltd t/a Trident Homes Christchurch**
Site Address: **4 Pukeko Way, Amberley**
Work Type: **New residential dwelling**
Building Category: **R1**

Inspection Type: **Pre-Cladding - Wrap**
Inspection Outcome: **Pass**
Inspected By: **Henry Stikkelman**
Inspection Date: **2 June 2021**

Passed Items

General

Inspection carried out	**Inspection carried out.** **OK to continue.**

Flashings

Inspection Type: **Pre-Line**
Inspection Outcome: **Fail**
Inspected By: **Henry Stikkelman**
Inspection Date: **2 June 2021**

Failed Items

Framing

Framing Moisture	**>20% - drying required**

Pass Non-Compliance

General

Inspection carried out	**Inspection carried out.** **Okay to line ceilings as metal and top plates < 17%.** **Re-inspection required for moisture content.**
Building weathertight	**Garage doors to be temp sealed.**

Other

Opening Air Seals	**Bottoms of full height (floor) units to be sealed**

Passed Items

General

Approved plans reviewed	**Yes - Electronic documents checked**
Warnngs and Bans	**None.**
Inspection Photos	**Taken.**

Framing

Ceiling Batten Material	**Steel - Rondo**
Ceiling Batten Size	**Rondo - 35 x 40mm trapezoidal**
Ceiling Batten Centres	**450mm**

Bracing location and type	**Previously checked, All as drawn**
Bracing clear of wet areas	
Bracing fixings/connections	**Previously checked, All as drawn**
Brace openings	**All OK**
Other	
Safety Glazing	**In place - as required - OK**
Window/joinery Rating	**Joinery displays correct ID rating for site wind speed**
Internal Ventilation	**Natural - opening windows & doors**
Insulation Material	**Pink Batts®**
R Value Walls	**>R2.8**
R Value Ceilings	**R4.0 - as designed**
Insulation Placement	**Good - tidy**
Water Services	
Pipework	**Polybutylene to hot & cold**
Jointing	**Brass, crimped**
Support/Clipping	**Good - secure - OK**
Shut Off Valve	**In place, as required (in Garage)**
Pressure Test	**Carried out - OK- Plumber to supply test declaration.**
Equipotential Bonding in place	**Bonding installed and connected**
Waste Services	
Pipework	**PVC**
Sizes	**All as drawn**
Support	
Gradients	**All in slab - prev. inspected - appear OK**

Support Documentation	**Status**
Application for CCC	Required
Electrical safety certificate (itemised)	Required
Gas safety certificate	Required
As-built drainage plan	Required
Plumbers pressure test declaration	Required
Design statement (truss manufacturer)	Required
Design statement (frame manufacturer)	Required
Under-slab hardfill compaction certificate	Required

Record of Restricted Building Work (LBP #)	**Status**
Designer	Accepted
Justin hannon - Received	
Carpentry	Required
Foundations	Required
Roofing	Required

Hurunui District Council
66 Carters Road
PO Box 13
Amberley 7441
Phone (03) 314 8816

SITE NOTICE

Consent No: **200465**
Applicant: **NM Build Ltd t/a Trident Homes Christchurch**
Site Address: **4 Pukeko Way, Amberley**
Work Type: **New residential dwelling**
Building Category: **R1**

Inspection Type: **Pre-Line**
Inspection Outcome: **Pass**
Inspected By: **Mark Milnes**
Inspection Date: **4 June 2021**

Passed Items

General

Inspection carried out	**Re - inspection carried out.** **OK to line**
Building weathertight	**Garage doors to be temp sealed.** **plywood cover - sited at reinspection.**

Framing

Framing Moisture	**>20% - drying required** **<17% - sited at re-inspection**

Other

Opening Air Seals	**Bottoms of full height (floor) units to be sealed** **sealed - sited at re-inspection** **Good, tidy**

Hurunui District Council
66 Carters Road
PO Box 13
Amberley 7441
Phone (03) 314 8816

SITE NOTICE

Consent No: **200465**
Applicant: **NM Build Ltd t/a Trident Homes Christchurch**
Site Address: **4 Pukeko Way, Amberley**
Work Type: **New residential dwelling**
Building Category: **R1**

Inspection Type: **Pre-Stop**
Inspection Outcome: **Pass**
Inspected By: **Henry Stikkelman**
Inspection Date: **8 June 2021**

Passed Items

General	
Inspection carried out	**Inspection completed. OK to continue**
Approved plans reviewed	**Yes - Electronic documents checked**
Warnngs and Bans	**None.**
Inspection Photos	**Yes**
Bracing	
Locations	**All as drawn**
Types	**Mixed types (refer plans) - as drawn**
Edge Nailing	**Wall bracing fixings**
Holes in elements	**All OK**
Materials	
Wet Areas	**GIB "Aqualine"® board 10mm**
Wet Area Ceilings	**GIB "Aqualine"® board 10mm**
Other Walls	**GIB board standard 10mm**
Other Ceilings	**GIB board standard 10mm**

Hurunui District Council
66 Carters Road
PO Box 13
Amberley 7441
Phone (03) 314 8816

SITE NOTICE

Consent No: **200465**
Applicant: **NM Build Ltd t/a Trident Homes Christchurch**
Site Address: **4 Pukeko Way, Amberley**
Work Type: **New residential dwelling**
Building Category: **R1**

Inspection Type: **Pre-Cladding - Mid Cladding**
Inspection Outcome: **Pass**
Inspected By: **Henry Stikkelman**
Inspection Date: **11 June 2021**

Passed Items

General	
Inspection carried out	**Inspection carried out** **OK to continue**
Approved plans reviewed	**Yes - Electronic documents checked**
Warnngs and Bans	**None**
Inspection Photos	**Yes.**
Cladding System	
Cladding system installed as per plans/ specs	
Cladding Fixings	
Cavity Batten size	**Nom. 40 x 19mm vert. timber (50 x 20)**
Cavity Batten spacing	**600mm centres**
Cavity Batten treatment	**H3.1 timber**
Vermin proofing	**PVC vent strip in place**
Head flashings	**Folded aluminium flashings with stop-ends X 2**
WANZ bars fitted	**Fitted to every window & door**
Photos taken	**YES - Any relevant photos taken**

Hurunui District Council
66 Carters Road
PO Box 13
Amberley 7441
Phone (03) 314 8816

SITE NOTICE

Consent No: **200465**
Applicant: **NM Build Ltd t/a Trident Homes Christchurch**
Site Address: **4 Pukeko Way, Amberley**
Work Type: **New residential dwelling**
Building Category: **R1**

Inspection Type: **Final - Residential**
Inspection Outcome: **Pass**
Inspected By: **Mark Milnes**
Inspection Date: **2 August 2021**

Passed Items

General	
Inspection carried out	
Approved plans reviewed	**Yes - Approved documents onsite checked**
Warnngs and Bans	
Inspection Photos	
Exterior	
FFL above GL	**Good - sufficient**
FFL above paving	**Good - sufficient - OK**
Cladding clearances	**Good - sufficient for cladding types - OK**
Flashings correct	**All as designed - OK**
Penetrations sealed	**YES - silicone sealed - OK**
Access level height	**<190mm - OK**
Non-slip access	**Boxed ready for broomed/floated concrete**
Roof fixed sufficiently	**Appear adequate**
Roof penetrations	**Boot flashing(s)**
Vermin proofing	**Gaps sealed as required - OK**
S/W discharge location	**From DP's through drains to soak-hole(s)**
Downpipes clipped	**YES - 2 x clips each**
ORG clipped	**150mm clearance & loose grate**
Gully heights	**Min 100mm above natural ground**
MV/BV size/location	**80mm in place as drawn**
Gas bottle location	**All as per gas install standards**
Mechanical vents to exterior	**YES - vented to soffit outlets**
Duct covers installed	**YES - exterior grilles in place**
Soffit lines sealed	**YES - all OK**
Photo Record	**YES - All relevant photos taken**
Interior	
Wet areas sealed	**Yes**
Safety glass installed	**Previously checked at Preline**

Aluminium joinery ID	**Labels fitted - H zoned**
Ventilation/Light	**Natural - sufficient glazing & openings**
Smoke dectectors	**In place where required, tested**
Impervious flooring	**In place where required**
Gas hob protection	**All clearances to combustibles OK**
Means of heating	**Heat pump(s)**
Plumbing	
Fixtures sealed/connected/vented	**All connected, all sealed to walls, AAV's in place as reqd**
Shower leak test	**Tested - all showers watertight**
Water main/isolation valve accessible	**In place, access cover in Garage**
Roof space	
Insulation fitment	**Good cover, tidy, no gaps**
Downlight clearance	**Covering allowed**
Ducting connected	**YES - all extract vent ducts connected**
Underlay fitment/laps	**Fitment & laps OK**
Pipework insulated	**Yes**
Pipework clipped/supported	**Yes**
Amendments/Site Instructions	
As-built building aligns with consent plans/documents	**Yes**
Site instructions signed off	**Yes**

GoGet Inspection Audit Report

Consent No: **200465**
Applicant: **NM Build Ltd t/a Trident Homes Christchurch**
Site Address: **4 Pukeko Way, Amberley**
Work Type: **New residential dwelling**

Inspection Type: **Pre-Cladding - Wrap**
Inspection Outcome: **Pass Non Compliance**
Inspected By: **Henry Stikkelman**
Inspection Date: **24 May 2021 9:44 a.m.**
Duration: **30 minutes**

Inspection Element	Status
General	Pass Non Compliance
Inspection carried out **Inspection carried out.** **OK to continue.**	Pass Non Compliance
Approved plans reviewed ***Yes - Electronic documents checked***	Pass
Warnngs and Bans **None**	Pass
Inspection Photos **Yes, taken**	Pass
Wrap/tape	Pass
Wrap/Barrier type **IBS RidgeRAP**	Pass
Wrap/Barrier fixing **Good - well fixed**	Pass
Wrap overhang to founds	Pass
Sill tape type **"Protecto Sill" flashing tape system throughout (BRANZ No. 450)**	Pass
Roof Underlay **Thermakraft 213 bituminous self supporting**	Pass
Netting support	N/A
Flashings	Pass Non Compliance
Flashing tape sill fixing **Full length as per manuf. specs**	Pass
Flashing tape head fixing **Full length as per manuf. specs**	Pass
Flashing tape jamb fixing **Full length as per manuf. specs**	Pass
Wrap Penetrations **Taped & sealed appropriately**	Pass
Meter box flashing **Not yet installed**	Pass Non Compliance
Direct Fix cladding requirements met (sill and jamb blocks)	N/A
Thermal Barrier	N/A



East wall
Taken at 9:42 AM on Monday 24/05/2021



Tape in place
Taken at 9:42 AM on Monday 24/05/2021



Tape to floor
Taken at 9:43 AM on Monday 24/05/2021



West wall
Taken at 9:43 AM on Monday 24/05/2021



South wall
Taken at 9:44 AM on Monday 24/05/2021

GoGet Inspection Audit Report

Consent No: **200465**

Applicant: **NM Build Ltd t/a Trident Homes Christchurch**

Site Address: **4 Pukeko Way, Amberley**

Work Type: **New residential dwelling**

Inspection Type: **Pre-Cladding - Wrap**

Inspection Outcome: **Pass**

Inspected By: **Henry Stikkelman**

Inspection Date: **2 June 2021 11:06 a.m.**

Duration: **15 minutes**

Inspection Element	Status
General	Pass
Inspection carried out **Inspection carried out.** **OK to continue.**	Pass
Flashings	Pass
Meter box flashing **Not yet installed**	N/A

HURUNUI District Council

Address: PO Box 13, Amberley
Telephone: (03) 314 8816
Facsimile: (03) 314 9181

NM Build Ltd t/a Trident Homes Christchurch
PO Box 76178
Northwood
Christchurch 8548

Customer No BC200465
Date 26/01/21

GST Reg No 53-915-477

Tax Invoice 47944

200465 : 4 Pukeko Way, Amberley
New residential dwelling
Owner: Steven & Wendy Olliver

BRANZ levy		388.00	0G
DBH Levy		679.00	*
Set Fee		4,365.00	*
Planning/PIM Processing		405.00	*
Water Connection		650.00	*
Sewer Connection		100.00	*
BCA Levy		310.40	*
Code Compliance Certificate		275.00	*
	BEFORE GST	**6,287.47**	
(* Includes GST)	**GST**	884.93	
	Sub Total	**$7,172.40**	
	Cash Received	1,500.00CR	

Total incl GST **$5,672.40**

Council's bank account 03-0802-0946666-00

NM Build Ltd t/a Trident Homes Chri

Customer No BC200465
Date 26/01/21
Invoice No 47944
Total Due $5,672.40

View Instrument Details

Instrument No.	10237191.1
Status	Registered
Date & Time Lodged	19 Feb 2016 09:47
Lodged By	Keenan, Dallas Elizabeth
Instrument Type	Consent Notice under s221(4)(a) Resource Management Act 1991

Affected Computer Registers	Land District
713202	Canterbury
713203	Canterbury
713204	Canterbury
713205	Canterbury
713206	Canterbury
713207	Canterbury
713208	Canterbury
713209	Canterbury
713210	Canterbury
713211	Canterbury
713212	Canterbury
713213	Canterbury
713214	Canterbury
713215	Canterbury
713216	Canterbury
713217	Canterbury
713218	Canterbury
713219	Canterbury
713220	Canterbury
713221	Canterbury
713222	Canterbury
713223	Canterbury
713224	Canterbury
713225	Canterbury
713226	Canterbury
713227	Canterbury
713228	Canterbury
713229	Canterbury
713230	Canterbury
713231	Canterbury
713232	Canterbury
713233	Canterbury
713234	Canterbury

Annexure Schedule: Contains 25 Pages.

Signature

Signed by Mark John Dineen as Territorial Authority Representative on 17/02/2016 03:23 PM

***** End of Report *****

© Copyright: Land Information New Zealand

HURUNUI DISTRICT COUNCIL
P.O. Box 13 | Amberley | 7441 | 66 Carters Road | Amberley | 7410
Phone 03 314-9816 | Fax 03 314-9161 | Email hdc@hurunui.govt.nz
Web hurunui.govt.nz | facebook.com/HurunuiDistrictCouncil
Skype hdc_customer_services | twitter.com/hurunuidc

IN THE MATTER OF the Resource Management Act 1991

AND

IN THE MATTER OF Subdivision Consent RC 140160, RC140196 and RC150161
47 Double Corner Road, Amberley

CONSENT NOTICE PURSUANT TO SECTION 221 OF THE RESOURCE MANAGEMENT ACT 1991

To: The Registrar-General of Lands
Canterbury Land Registration District

TAKE NOTICE that the land hereinafter described is subject to conditions in relation to the subdivision consents **RC140160, RC140196 and RC150161** as follows:

THAT with regard to Lots 32 and 100 under Plan number DP 488914

6. *Any habitable building constructed on Lot 100 and Lot 32, Lot 44 and Lot 45 shall be setback 10 metres from the boundary frontage with Double Corner Road.*

7. *Any building constructed on Lot 100, Lot 32, Lot 44 and Lot 45 within the identified "50 metre Setback from Forestry Plantation" as shown on the approved Overview Staged Scheme Plan (Reference: 11713, Revision: F, Drawing No: SC-01, Dated: 10 December 2014, Drafter: C Hurford) shall be constructed in accordance with the recommendations made in the Fire Hazard report prepared by Allan Grigg, Councils' Emergency Management Officer, in particular that:*
   - *Installation and regular testing of smoke alarms*
   - *Installation of easily accessible roof access hatches and large ceiling spaces to enable residents or fire fighters to patrol for penetration of wind borne embers.*
   - *Fire resistant roofing materials with ember guards to prevent windborne embers entering through roof openings, vents etc.*
   - *Eaves to be enclosed and vents to be screened.*
   - *All glazed openings to be double glazed glass*
   - *Ensure the likely required volume and pressure of water is supplied to the subdivision to ensure New Zealand Fire Service is able to adequately protect the subdivision from threat of wildfire.* (Attached as Appendix A.)

THAT with regard to Lots 1 to 7 under Plan number DP 488914

30. *The owners of lots 1 – 7 shall be responsible for undertaking all necessary maintenance to meet the requirements of the stormwater management plan for rights-of-way A – G.* (Attached as Appendix B.)

THAT with regard to Lots 10 to 15 under Plan number DP 488914

32. *The owners of lots 10 – 15 shall be responsible for undertaking all necessary maintenance to meet the requirements of the stormwater management plan for rights-of-way H – M.* (Attached as Appendix B.)

THAT with regard to Lot 21 under Plan number DP 488914

34. *The owner of lot 21 shall be responsible for undertaking all necessary maintenance to meet the requirements of the stormwater management plan for rights-of-way N and O.* (Attached as Appendix B.)

THAT with regard to Lots 1 to 24 and 100 under Plan number DP 488914

36. *The owners of lots 1 – 24 and lot 100 (recreation reserve) shall comply with Council's global stormwater discharge consent (ECan ref CRC082988), the following shall apply:*
    a) *At the time of building on the lots, stormwater runoff from buildings and hardstand areas on the lots resulting from up to and including the 24 hour 2% AEP rainfall event shall be managed so that no runoff enters any other property;*
    b) *For on-site soak pits, the following shall apply:*
        - *An investigation shall be carried out at each soak pit location to determine the soakage rate and water table depth;*
        - *Soak pits shall be designed to cater for runoff from up to and including the 24 hour 10% AEP rainfall event, with allowance made for overflow from up to and including the 24 hour 2% AEP rainfall event;*
        - *For soak pits dealing with roof and/or non-trafficable hardstand areas, roofs shall not be zinc-coated (galvanised), and systems shall be sealed to prevent entry of contaminants;*
        - *For soak pits dealing with trafficable hardstand areas, soak pit base levels shall be at least 1 metre above the water table, and pre-treatment shall be provided (e.g. vegetated swales and/or submerged outlet sumps).*
    c) *A stormwater management plan for the on-site stormwater systems installed under this condition shall be submitted to Council for approval; and*
    d) *The owner of the lot shall be responsible for undertaking all necessary maintenance to meet the requirements of the stormwater management plan submitted for the on-site stormwater systems installed under this condition.*

THAT with regard to Lots 2 and 3 under Plan number DP 488914

45. *Lots 2 and 3 shall have no direct vehicular access to Amberley Beach Road*

THAT with regard to Lot 1 under Plan number DP 488914

46. *Lot 1 shall have no direct vehicular access to Amberley Beach Road or to Lot 101 (new Road to vest).*

48. *At the time of building on Lots 1, 2, 6, 7, 10, 11, 13, 14, 15 and 21 a vehicle crossing shall be constructed in accordance with Survus Consultants drawing 'DD-01 Vehicle Crossing Details REV 2' and 'DP-01 Vehicle Crossing Plan REV1' as appropriate.* (Attached as Appendix C.)

THAT with regard to Lot 21 under Plan number DP 488914

47. *Lot 21 shall have no direct vehicular access to Amberley Beach Road or to Lot 101 (new road to vest).*

48. *At the time of building on Lots 1, 2, 6, 7, 10, 11, 13, 14, 15 and 21 a vehicle crossing shall be constructed in accordance with Survus Consultants drawing 'DD-01 Vehicle Crossing Details REV 2' and 'DP-01 Vehicle Crossing Plan REV1' as appropriate.* (Attached as Appendix C.)

THAT with regard to Lots 2, 6, 7 10, 11, 13 to 15 under Plan number DP 488914

48. *At the time of building on Lots 1, 2, 6, 7, 10, 11, 13, 14, 15 and 21 a vehicle crossing shall be constructed in accordance with Survus Consultants drawing 'DD-01 Vehicle Crossing Details REV 2' and 'DP-01 Vehicle Crossing Plan REV1' as appropriate.* (Attached as Appendix C.)

THAT with regard to Lots 1 to 24 and 100 under Plan number DP 488914

55. *The owners of lots 1 – 24 and lot 100 (recreation reserve) shall be advised that:*
    a) *At the time of building on the lots, an approved private in-ground pump unit system (consisting of a heavy duty E/One submersible grinder pump in an underground polyethylene tank, or similar system as approved by Hurunui District Council) shall be installed and connected to the roadside boundary kits to cater for wastewater disposal from the lots; and*
    b) *The owner of the lot shall be responsible for all costs associated with the installation and on-going operation, repairs and maintenance of the system installed under this condition.*

THAT with regard to Lots 25 to 29 under Plan number DP 488914

65. *The owners of lots 25 – 29 shall be responsible for undertaking all necessary maintenance to meet the requirements of the stormwater management plan for rights-of-way N and P –U.* (Attached as Appendix B.)

THAT with regard to Lots 25 to 32 under Plan number DP 488914

67. *The owners of lots 25 – 32 shall comply with Council's global stormwater discharge consent (ECan ref CRC082988), the following shall apply:*
    a) *At the time of building on the lots, stormwater runoff from buildings and hardstand areas on the lots resulting from up to and including the 24 hour 2% AEP rainfall event shall be managed so that no runoff enters any other property;*
    b) *For on-site soak pits, the following shall apply:*
        - *An investigation shall be carried out at each soak pit location to determine the soakage rate and water table depth;*
        - *Soak pits shall be designed to cater for runoff from up to and including the 24 hour 10% AEP rainfall event, with allowance made for overflow from up to and including the 24 hour 2% AEP rainfall event;*
        - *For soak pits dealing with roof and/or non-trafficable hardstand areas, roofs shall not be zinc-coated (galvanised), and systems shall be sealed to prevent entry of contaminants;*
        - *For soak pits dealing with trafficable hardstand areas, soak pit base levels shall be at least 1 metre above the water table, and pre-treatment shall be provided (e.g. vegetated swales and/or submerged outlet sumps).*

c) *A stormwater management plan for the on-site stormwater systems installed under this condition shall be submitted to Council for approval; and*
d) *The owner of the lot shall be responsible for undertaking all necessary maintenance to meet the requirements of the stormwater management plan submitted for the on-site stormwater systems installed under this condition.*

THAT with regard to Lots 25 under Plan number DP 488914

72. *Lot 25 shall have no direct vehicular access to Amberley Beach Road or Double Corner Road.*

74. *At the time of building on Lots 25, 26 & 29 an accessway (vehicle crossing) shall be constructed in accordance with Survus Consultants drawing 'DD-01 Vehicle Crossing Details REV 2' and 'DP-01 Vehicle Crossing Plan REV1' as appropriate.*(Attached as Appendix C.)

THAT with regard to Lots 27 and 32 under Plan number DP 488914

73. *Lots 26, 27 and 32 shall have no direct vehicular access to Double Corner Road.*

THAT with regard to Lot 26 under Plan number DP 488914

73. *Lots 26, 27 and 32 shall have no direct vehicular access to Double Corner Road.*

74. *At the time of building on Lots 25, 26 & 29 an accessway (vehicle crossing) shall be constructed in accordance with Survus Consultants drawing 'DD-01 Vehicle Crossing Details REV 2' and 'DP-01 Vehicle Crossing Plan REV1' as appropriate.*(Attached as Appendix C.)

THAT with regard to Lot 29 under Plan number DP 488914

74. *At the time of building on Lots 25, 26 & 29 an accessway (vehicle crossing) shall be constructed in accordance with Survus Consultants drawing 'DD-01 Vehicle Crossing Details REV 2' and 'DP-01 Vehicle Crossing Plan REV1' as appropriate.*(Attached as Appendix C.)

THAT with regard to Lots 25 to 32 under Plan number DP 488914

81. *Lots 25 – 32 shall:*
    a) *At the time of building on the lots, an approved private in-ground pump unit system (consisting of a heavy duty E/One submersible grinder pump in an underground polyethylene tank, or similar system as approved by Hurunui District Council) shall be installed and connected to the roadside boundary kits to cater for wastewater disposal from the lots; and*
    b) *The owner of the lot shall be responsible for all costs associated with the installation and ongoing operation, repairs and maintenance of the system installed under this condition.*

DESCRIPTION OF LAND AFFECTED BY CONSENT NOTICE

All that piece of land containing:

0.1847 hectares being Lot 1 DP 488914 (Canterbury Registry)
0.1971 hectares being Lot 2 DP 488914 (Canterbury Registry)
0.1947 hectares being Lot 3 DP 488914 (Canterbury Registry)
0.1953 hectares being Lot 4 DP 488914 (Canterbury Registry)
0.2155 hectares being Lot 5 DP 488914 (Canterbury Registry)
0.1918 hectares being Lot 6 DP 488914 (Canterbury Registry)
0.1932 hectares being Lot 7 DP 488914 (Canterbury Registry)
0.1856 hectares being Lot 8 DP 488914 (Canterbury Registry)
0.2302 hectares being Lot 9 DP 488914 (Canterbury Registry)
0.2291 hectares being Lot 10 DP 488914 (Canterbury Registry)
0.2358 hectares being Lot 11 DP 488914 (Canterbury Registry)
0.2748 hectares being Lot 12 DP 488914 (Canterbury Registry)
0.2304 hectares being Lot 13 DP 488914 (Canterbury Registry)
0.2406 hectares being Lot 14 DP 488914 (Canterbury Registry)
0.2183 hectares being Lot 15 DP 488914 (Canterbury Registry)
0.2175 hectares being Lot 16 DP 488914 (Canterbury Registry)
0.2155 hectares being Lot 17 DP 488914 (Canterbury Registry)
0.2128 hectares being Lot 18 DP 488914 (Canterbury Registry)
0.2088 hectares being Lot 19 DP 488914 (Canterbury Registry)
0.2316 hectares being Lot 20 DP 488914 (Canterbury Registry)
0.2225 hectares being Lot 21 DP 488914 (Canterbury Registry)
0.2181 hectares being Lot 22 DP 488914 (Canterbury Registry)
0.2136 hectares being Lot 23 DP 488914 (Canterbury Registry)
0.2210 hectares being Lot 24 DP 488914 (Canterbury Registry)
0.2246 hectares being Lot 25 DP 488914 (Canterbury Registry)
0.2428 hectares being Lot 26 DP 488914 (Canterbury Registry)
0.2400 hectares being Lot 27 DP 488914 (Canterbury Registry)
0.2495 hectares being Lot 28 DP 488914 (Canterbury Registry)
0.2261 hectares being Lot 29 DP 488914 (Canterbury Registry)
0.2026 hectares being Lot 30 DP 488914 (Canterbury Registry)
0.2070 hectares being Lot 31 DP 488914 (Canterbury Registry)
0.2100 hectares being Lot 32 DP 488914 (Canterbury Registry)
3.7396 hectares being Lot 100 DP 488914 (Canterbury Registry)

DATED this 27 day of November 2015

SIGNED for and on behalf of
THE HURUNUI DISTRICT COUNCIL
Pursuant to Section 221 of the
Resource Management Act 1991



Authorised Officer (for the purposes of
Section 221 Resource Management Act 1991)

[redacted]

Rural Fire Report and Recommendations on Wildfire Threat to Double Corner Road Subdivision Proposal

Background

Allan Grigg was approached in his capacity as PRFO (Principal Rural Fire Officer) of the Hurunui District to provide advice on the wildfire hazard for houses to be built on Double Corner Road in close proximity to Proseed Seedling Nursery on the outskirts of Amberley.

The area under scrutiny is located both within the Hurunui District Council boundary and within the Hurunui District Council Rural Fire Authority fire jurisdiction.

Critical Factors

There are two critical factors that constitute the majority of the wildfire threat to structures on the edge of a forest.
These are fire intensity and ember transport. Each of these factors will be briefly explained below.

Fire Intensity

Fire intensity is measured in kilowatts per square metre.
A table is provided below (Figure1) to allow understanding of what different levels of fire intensity actually mean in real terms.

Figure 1

Fire Danger Class	Flame Height (Metres)	Fire Intensity (kW/m)	Minimum fire suppression resources for direct head fire attack
Low	0 - 0.2	0 - 10	Ground crew with hand tools
Moderate	0.2 – 1.3	10 – 500	Ground crew and back-pack pumps
High	1.3 – 2.5	500 – 2000	Water under pressure and heavy machinery
Very High	2.5 – 3.5	2000 – 4000	Head fire attack using aircraft and long term retardants may be effective, but it may be too dangerous for ground crews.
Extreme	3.5 +	>4000	Head fire attack not likely to be effective, and it will be too dangerous for ground crews.

Important Note:

Once a vegetation wildfire gets above 3.5 metres in height or beyond 4000 kilowatts direct fire suppression on a head fire is generally ineffective as any water being applied is evaporated before it reaches the flames, even if dropped by aircraft. Indirect fire suppression e.g. long term retardant lines or firebreaks or a change in weather, fuels or topography is required to stop the fire. In short once a fire reaches a certain intensity we have no direct means of stopping its progress.

The graph below (Figure 2) depicts how fire intensity drops away with distance from the head of a wildfire. In the Prometheus fire growth models examined later in this report, the following fire intensity readings are calculated;

- Scenario 1 – 46,000 kW/m
- Scenario 2 – 90,612 kW/m
- Scenario 3 – 77,806 kW/m

Figure 2 suggests that fibreboard at a distance between 0 - 10m from a fire line intensity of 80,000kW/m would spontaneously ignite. So if houses were 30m away, then this is more than adequate protection from radiation from a forest.

Figure 2

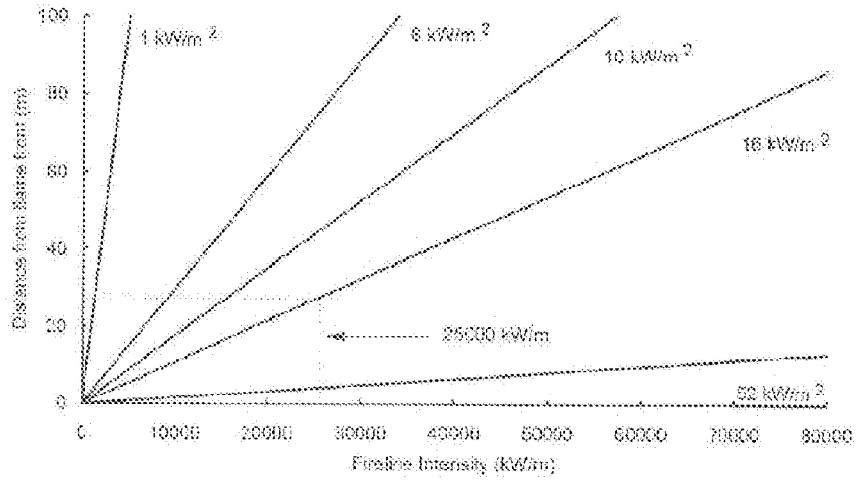

Figure 4. Approximate radiation intensity levels (kW/m²) at different fireline intensities (kW/m) and distances (m) from the flame front[5], where each of the levels are as follows (from Drysdale 1985):

1 kW/m²:	the level where firefighters can withstand indefinite skin exposure;
6.4 kW/m²:	the level where pain will be experienced after 8 seconds on exposed skin;
10.4 kW/m²:	the level where pain will be experienced if the skin is exposed for 3 seconds;
16 kW/m²:	the level where exposed skin will blister after 5 seconds of exposure, and medical treatment will be required, and
52 kW/m²:	the level at which fibreboard will spontaneously ignite.

[5] The relationship used is from Leicester (1985); it is: $Q = 60\,(1 - \exp[-0.0000\,D])$, where Q is radiation intensity (kW/m²), I is fire intensity (kW/m) and D is distance from flame front (m).

Fogarty 1996.http://www.scionresearch.com/__data/assets/pdf_file/0019/5806/Bulletin1.pdf

Ember Transport

Embers are the unappreciated cause of most structure ignitions caused by wildfires. Embers range from tiny sub millimetre sparks to large inch sized chunks. When transported by wind they can lodge in gutters, get under doorways and enter roof spaces or windows, igniting fires from within the structures themselves.

Figure 3



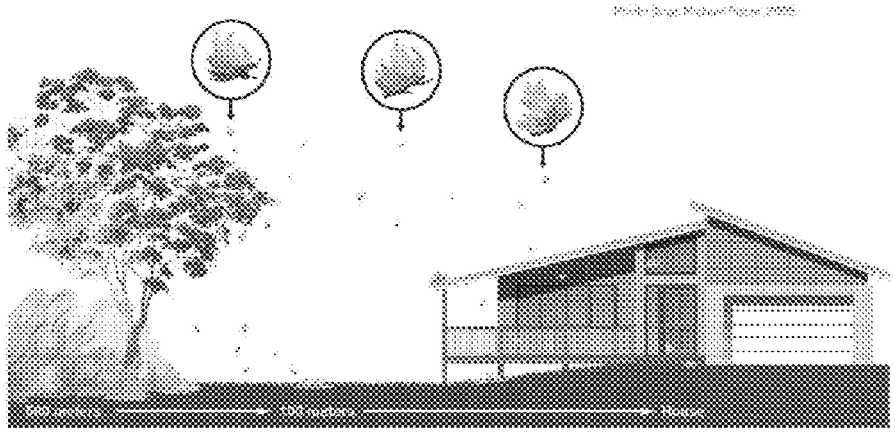

- The Royal Commission to the Black Saturday bushfires in Australia recommend that houses be **designed and built in such a way that embers have less chance of settling on or inside a house** – and subsequently setting it on fire.

Prometheus Fire Growth Computer Modelling

The NRFA (National Rural Fire Authority) provides a system that measures the current fire environment through monitoring of weather patterns in local climates across the country.
This system produces fire weather observations, fuel moisture codes and potential fire behaviour indices. This information combined is referred to as the NZ Fire Danger Rating System. The resulting indices combined with specific information on available fuels and local topography enable validated fire behaviour calculations to be made that allow an estimation of the potential fire intensity that could be present at the outside edge of the seedling nursery in question. This provides rural fire managers with information from which decisions about fire risk or fire fighting resource needs can be made.
The fire danger indices used for the fire behaviour calculations were taken from an average of the most dangerous fire environment conditions over the last five years, taken from a RAWS (Remote Access Weather Station) located near the Ashley Forest. This ensured that a realistic, foreseeable scenario was considered.

The following fire weather index readings were provided;

Figure 4

Code	Value	Full Name	What is it?	What does it mean?
FFMC	93.2	Fine Fuel Moisture Code	Measure of moisture in fine fuels e.g. grasses, pine needles	Indicates how easily a fire would ignite
DMC	46.68	Duff Moisture Code	Measure of shallow organic layers of ground e.g. peat, needle beds	Indicates how easily medium fuels will burn and how deep into ground fires will penetrate
DC	276.6	Drought Code	Measure of moisture in deep organic layers in ground e.g. buried logs, roots	Measures how easily large fuels will burn and how deep into ground fires will penetrate
ISI	32.46	Initial Spread Index	Combines wind and FFMC to measure rate of fire spread	Indicates how fast a fire will grow
BUI	62.54	Build Up Index	Combines DMC and DC to measure amount of heavier fuels able to burn	Measures how much fuel will be available to burn and indicates the difficulty of fire suppression
FWI	38.36	Fire Weather Index	Combines ISI and BUI to measure fire intensity and spread	Indication of how much fuel intensity is likely
Temp	24.9	Temperature	Measure how hot it is	The more heat, the drier the fuels and increased likelihood of ignition
RH	31	Relative Humidity	Measures percentage of moisture in air	Less moisture means drier fuels and increased likelihood of ignition
Wind Dir.	45° NE	Wind Direction	Direction of Wind	Influences which way the fire will travel
Wind Speed	35 km/h	Wind Speed	Speed of Wind	Influences amount of oxygen a fire receives, affecting fire intensity and spread

The trees were assumed to five to ten year old pine trees as this is the highest fuel loading that is likely to be present over time.

Fire Behaviour Calculations

The calculated maximum potential fire intensity generated by this fire is 166530 kW/m. (kilowatts per metre)

The following assumptions have been made;

- The fuels are continuous and their vertical & horizontal arrangements are such to allow maximum fire growth. (There is no specific fuel class developed to allow calculation of seedling nursery fuels. The five to ten year old pine fuel class was the most similar of the available fuel classes but it needs to be understood that seedling nurseries are different to a five to ten year old pine forest block.)
- The fire has reached its maximum fire growth potential / equilibrium
- No suppression is being undertaken (There are no calculations available to allow for suppression effects.

It is the authors opinion that the assumed fuel state is not likely to be present in a seedling nursery. With this in mind, using subjective judgement based on experience, the author believes that the calculated potential fire intensity should be reduced by half as the fuels present would not allow such an intense fire to develop.

Therefore the author adjusts the calculated fire intensity to be approximately **85,000 kW/m**

Other Factors to Consider

- It is acknowledged that the area defined as a forest is in fact a seedling nursery as opposed to a forest with a planting / harvesting cycle, hence unlikely to have tall trees, or a build-up of fuels. If the purpose of the "forest" was to change from seedling production to tree harvesting would this be notified or otherwise require consent or is there potential for a significantly more hazardous risk to develop that might affect an otherwise acceptable level of risk if the "forest" was to remain a seedling nursery?

- It is acknowledged that primary dwellings and outbuildings are located very close to the edge of forests throughout New Zealand. This is not considered by the author of this report to be justification to allow further buildings to be potentially placed at an unacceptable level of risk so has been discounted as any sort of precedent affecting this or future decisions on proximity of structures to forests.

- It is believed that any conditions to manage or reduce wild fire risk that are imposed on this project are not only written into a covenant but also clearly and prominently inserted into the LIMs report to ensure any potential buyers are aware of the potential residual risk and can form their own opinion on a level of risk acceptable to them as potential buyers. It is the author's experience that covenants can often be overlooked or poorly understood.

Recommendations

The following mitigation measures are recommended as conditions to be imposed;

- Due to the lack of fuel burning data for seedling nurseries and the resulting uncertainty over fire intensity, **a minimum setback of 30 metres** from the boundary for structures would ensure any structure would be clear of the potential maximum radiant heat combustion zone.
- Installation and regular testing of smoke alarms
- Installation of easily accessible roof access hatches and large ceiling spaces to enable residents or fire fighters to patrol for penetration of wind borne embers.
- Fire resistant roofing materials with ember guards to prevent windborne embers entering through roof openings, vents etc.
- Eaves to be enclosed and vents to be screened.
- All glazed openings to be double glazed glass
- Ensure the likely required volume and pressure of water is supplied to the subdivision to ensure New Zealand Fire Service is able to adequately protect the subdivision from threat of wildfire.

The need for these recommended mitigation measures is considered necessary by the sheer volume of available fuel that has the potential to produce extremely high fire intensity, far beyond what the odd isolated or small area of trees or shrubs/scrub would generate.

Conclusion

Mitigation measures can be imposed and undertaken but it is important all present and future parties understand that mitigation measures reduce the likelihood and consequence of an extreme wildfire event occurring, but do not eliminate the risk altogether. In spite of all mitigation measures an extreme wildfire event still has the potential to burn any structures near a forest to the ground. Only the owner or prospective new owners can determine whether an acceptable level of risk to them has been achieved.

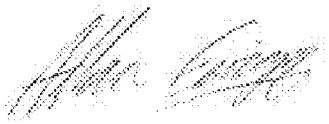

Allan Grigg
Principal Rural Fire Officer
Hurunui District Council

[redacted]

Barry Fairburn
CONSULTING ENGINEER

LMM INVESTMENTS 2012 LIMITED

SUBDIVISION OF 47 DOUBLE CORNER ROOAD - AMBERLEY

STORMWATER MANAGEMENT PLAN

Date: January 2015

Revision 0

6 GODLEY QUAY
LYTTELTON
CHRISTCHURCH 8082
NEW ZEALAND

TELEPHONE (03) 328 7364
MOBILE 027 619 5037
FAX (03) 328 7364
Email: fairburn.b@xtra.co.nz

LMM INVESTMENTS 2012LIMITED
SUBDIVISION OF 47 DOUBLE CORNER ROAD
AMBERLEY

STORMWATER MANAGEMENT PLAN

1. PURPOSE OF THE PLAN

This Stormwater Management Plan (The Plan) seeks to comply with Conditions 15 b), 17 and 18 of Subdivision Consent RC140160, which apply the complete subdivision, plus the following conditions for the separate stages:

- Conditions 30 to 37, which apply to Stage 1.
- Conditions 62 to 66, which apply to Stage 2.
- Conditions 84 to 87, which apply to Stage 3.
- Conditions 104 and 105, which apply to Stage 4.

Condition 62 requires that an overland flow path be created across Lot 26, to transfer the stormwater flow from extreme storm events (more severe than a 2% AEP / 24-hour event) from the adjacent right of way to Double Corner Road. This will be achieved by constructing a swale along the boundary of Lot 26, of the same profile as the swale along the right of way. This swale will be protected by easement in favour of the owners of Lots 25 to 29.

Specifically, Condition 15 b) requires that The Plan should demonstrate how the requirements of Ecan Global Consent CRC082988 will be met, including soakage investigation results for all proposed road and right of way soak pit locations.

1.1 Compliance with Global Consent CRC082988

A copy of Global Consent CRC082988 is contained in Appendix A.

The proposed method of stormwater discharge from the subdivision is to the ground, within the subdivision area.

The stormwater system design complies with Conditions 13 and 14 and the discharges to ground comply with Conditions 15 and 16.

The stormwater systems will be maintained in accordance with this Stormwater Management Plan, which complies with Conditions 21 and 22. Particularly, the treatment swales will be maintained in accordance with Condition 22, as described in Section 6.1 below.

1.2 Soakage investigation results

Revision 1 of an application to the HDC for a permit to discharge stormwater to the ground, in accordance with Global Consent CRC082988, is contained in Appendix B. Note: The revision was required to meet the Conditions of HDC Consent 140160. Section 2 of this document contains detailed information regarding the soakage testing undertaken and the soakage test results.

In summary, the soil profiles comprise a soil / silt layer not less than 950mm deep over a sandy gravel drainage layer with groundwater level not less than 3.0 m below ground and soakage testing demonstrated that the sandy gravel layer provides a high level of hydraulic conductivity.

The testing results were discussed at a pre-application meeting held 5 September 2014, at which it was agreed that a conservative soakage rate of 400mm/hour may be adopted universally across the site.

1.3 Soak pit locations

The road and right of way soak pits are shown on the Survus Consultant road plans provided. The locations were chosen to ensure that the length of road served by each soak pit will not exceed the maximum length calculated (on the spreadsheets in Appendix B) to equate to the soak pit capacity.

2. THE GUIDING PRINCIPLES OF STORMWATER MANAGEMENT

The three main purposes of the Stormwater Management Plan are:

- To identify the need for operational and maintenance (O&M) activities.
- To specify a range of operational and maintenance tasks needed for the stormwater disposal facilities to fulfill their purpose.
- To comply with the relevant conditions of the subdivision consent and stormwater discharge permits, as discussed above.

The prime objectives to be achieved through the application of The Plan are:

- The facilities will function as the designer intended.
- The adopted O&M procedures are sustainable, efficient and cost effective.
- The assets are maintained in good condition in perpetuity.
- All work is done in accordance with current NZ legislation, particularly the Health and Safety in Employment Act: 1993.

3. SUPPORTING DOCUMENTATION

This Plan shall be read in conjunction with:

- Ecan Global Consent CRC082988 (contained in Appendix A).
- Revision 1 of an application to the HDC for a permit to discharge stormwater to ground, in accordance with Global Consent CRC082988 (contained in Appendix B).
- The Sediment and Erosion and Dust Management Plan (contained in Appendix C).

- HDC Consent RC140160 (contained in Appendix D).

4. DESCRIPTION OF THE STORMWATER SYSTEMS

The stormwater systems to be provided to serve the subdivision are as follows:

The stormwater facilities on the roads and rights of way comprise:

- Treatment swales.
- Submerged entry sumps
- Soak pits.

The stormwater facilities on the allotments of the subdivision comprise:

- Sealed drains.
- Rock-filled soak pits.
- Overflow channels.
- Vegetated filter strips.

5. THE CONSTRUCTION PHASE

5.1 The Subdivision Development

The Plan will be issued to the construction contractor, with the status of a contract document i.e. enforceable by the engineer.

Regarding stormwater issues, the following aspects of the work are critical:

5.1.1 Grass strike

Until a grass strike has been achieved on the berms and swales of the roads and rights of way, there will be no stormwater treatment and there is a high risk of the release of silty water. Thus, every effort shall be made to achieve a satisfactory grass strike in the minimum timeframe

5.1.2 The protection of soak pits

Until a satisfactory grass strike has been achieved on the berms and swales of the roads and rights of way, there is a significant risk of a release of silty water entering completed soak pits, which could cause blockages. It will be specified that all completed soak pits must be protected against the ingress of silty water, until a satisfactory grass strike has been achieved, by using silt fences, or other approved means.

5.1.3 Depth of soak pits

To comply with Global Consent 082988 Condition 16(A)v, we need to maintain a separation distance of not less than 1.0 m between the base of a soak pit and highest groundwater level, which generally equates to a maximum effective soak pit depth of not more than 1.5m. This will be the standard case. But, in some locations, the sandy gravel drainage layer may not have been penetrated at an effective depth of 1.5m, in which case, the soak pit will be increased in depth, so that it penetrates the drainage layer by not less than 300mm i.e. it is a requirement that ALL soak pits, serving roads, rights of way and residential sites, penetrate the sandy gravel drainage layer by not less than 300mm.

5.1.4 Inspections following rainfall

The maximum risk to incomplete stormwater systems occurs following heavy rainfall. The contractor will be required to put systems in place that will ensure that if a storm occurs outside working hours appropriate staff, with adequate resources, will undertake inspections of vulnerable work areas and rectify any problems that have occurred.

5.2 Housing construction

Lot purchasers will be required to engage builders who will manage stormwater issues, in accordance with the Environment Canterbury booklet: *Erosion and Sediment Control for Small Sites.*

6. FUTURE MAINTENANCE

Records of the maintenance of the stormwater disposal systems serving the roads and rights of way shall be kept, including all maintenance activities undertaken. Copies of these records shall be made available to the Hurunui District Council, upon request.

6.1 Routine maintenance of swales

The minimum standard of maintenance of the swales along the roads and rights of way is governed by Condition 22 of Ecan Global Consent CRC082988 and the provisions of this Plan.

The standard of maintenance shall be such that the vegetation and/or grass is in a healthy and uniform state, with the exception of seasonal browning off in the summer or autumn.

The routine maintenance tasks shall be as follows:

- Swales are to be inspected at least every six-months, when all visible hydrocarbons, litter, debris and accumulated sediment shall be removed. Note: Any hydrocarbons are to be removed to a facility authorized to receive such material.
- Any scouring, erosion or permanent die-off, which has resulted in bare or patchy soil cover, is to be replanted within two weeks of the inspection, subject to weather and seasonal conditions.
- Where grass is mown, the grass length is to be maintained between 40 mm and 150 mm. All cut grass shall be removed.

6.2 Routine maintenance of sumps

- Sumps are to be inspected at least every six-months, when all visible hydrocarbons, litter, debris and accumulated sediment, within the vicinity of the sumps, shall be removed. Note: Any hydrocarbons are to be removed to a facility authorized to receive such material.

- As part of the inspections, sumps shall be opened and detritus removed. The entry and outlet pipes are to be checked to ensure that they are not blocked. Any blockages are to be rectified immediately.

6.3 Routine maintenance of soak pits on the roads and rights of way

- Soak pits are to be inspected at least every six-months, when all visible, surface hydrocarbons, litter, debris and accumulated sediment shall be removed. Any evidence that a soak pit is failing is to be noted, such as the ponding of water or signs (such as dead grass) that ponding has occurred after rainfall shall be investigated and rectified.
- As part of the inspections, the inspection lid shall be opened and an inspection made of the perforated distribution pipe, using a powerful torch. Any damage or blockages are to be rectified immediately.
- If an inspection reveals that remedial work is required, to avoid potential failure, such as the excavation and replacement of rock fill, it is to be carried out within twenty-days of the inspection. In extreme cases, soak pits may need to be completely replaced.

6.4 Routine maintenance of stormwater systems on the allotments

The lot owners will be the consent holders and operators of the on-site stormwater systems, in accordance with the subdivision consent conditions, and are required to comply with the appropriate provisions of this Plan.

- Allotments on Stage 1 of the subdivision need to comply with Condition 36 a), b), c) and d).
- Allotments on Stage 2 of the subdivision need to comply with Condition 65 a), b), c) and d).
- Allotments on Stage 3 of the subdivision need to comply with Condition 86 a), b), c) and d).
- Allotments on Stage 4 of the subdivision need to comply with Condition 104 a), b), c) and d).

Appendix B provides design information, based upon the use of a rock-filled sock pit.

The specific routine maintenance tasks required for on-site stormwater systems are as follows:

- The house drains are to be inspected at least every six-months, including opening all inspection chambers. Any evidence that the stormwater system is failing or blocked, such as the back-up of water in the drains, is to be investigated and rectified.
- Soak pits are to be inspected at least every six-months, when all visible, surface hydrocarbons, litter, debris and accumulated sediment shall be removed. Any evidence that a soak pit is failing, such as the ponding of water or signs (such as dead grass) that ponding has occurred after rainfall shall be investigated and rectified. If an inspection reveals that remedial work is required, to avoid potential failure, such as the excavation and replacement of rock fill, it is to be carried out within twenty-

days of the inspection. In extreme cases, soak pits may need to be completely replaced.

- The overflow channel required by the relevant consent condition shall comprise a swale from the soak pit to the road frontage, as described Appendix B. The channel shall be mown, if grass covered, or well tended if vegetated, to ensure the capacity of the channel is not reduced below the design requirement.
- Stormwater discharged from hardstand areas on the allotments will be to ground via vegetated filter strips or submerged entry sumps, as required by the consent conditions. Any filter strips shall slope gently away from the edges of trafficable hardstand areas, and be not less than 2m wide. The filter strips shall be mown, if grass covered, or well tended if vegetated.

6.5 Non-routine maintenance

From time to time there may be a need to undertake unprogramed work due to unforeseen circumstances such as an accidental spillage.

In the event of a spillage of fuel or any other hazardous liquid, a clean-up may be necessary, which, depending on the severity, may need to be coordinated with HDC and/or the fire service and, if there is a risk of environmental damage, Ecan should be informed.

7. MAINTENANCE RESPONSIBILITY

7.1 Stormwater systems serving roads

On the completion of the subdivision and the expiry of the contractor's periods of defects liability, the operation and maintenance of the roads, including the stormwater systems, will be vested in the HDC, who will be responsible for all maintenance activities and compliance with relevant parts of this Plan.

7.2 Stormwater systems serving rights of way

The responsibility for maintenance of the stormwater systems serving the rights of way is set out in the Conditions of Consent RC140160, as follows:

STAGE 1

Lots 1 – 7 need to comply with Condition 30, for rights of way A - G.

Lots 10 – 15 need to comply with Condition 32, for rights of way H - M.

Lot 21 needs to comply with Condition 34, for rights of way N - O.

STAGE 2

Lots 25 – 29 need to comply with Condition 63, for rights of way N and P – U.

STAGE 3

Lots 38 and 40 need to comply with Condition 84, for rights of way V - W.

When each allotment is sold, stormwater maintenance responsibility passes to the new owner, in accordance with a consent notice on the title. Stormwater maintenance responsibility for all unsold allotments is held by the subdivision consent holder, whose contact information is:

Mr Ross Moffatt
LMM Investments 2012 Limited
80 Jacksons Road
RD 2
KAIAPOI 7692
Business Phone: 021 312 244
Ross.moffatt@xtra.co.nz

Barry Fairburn

January 2015

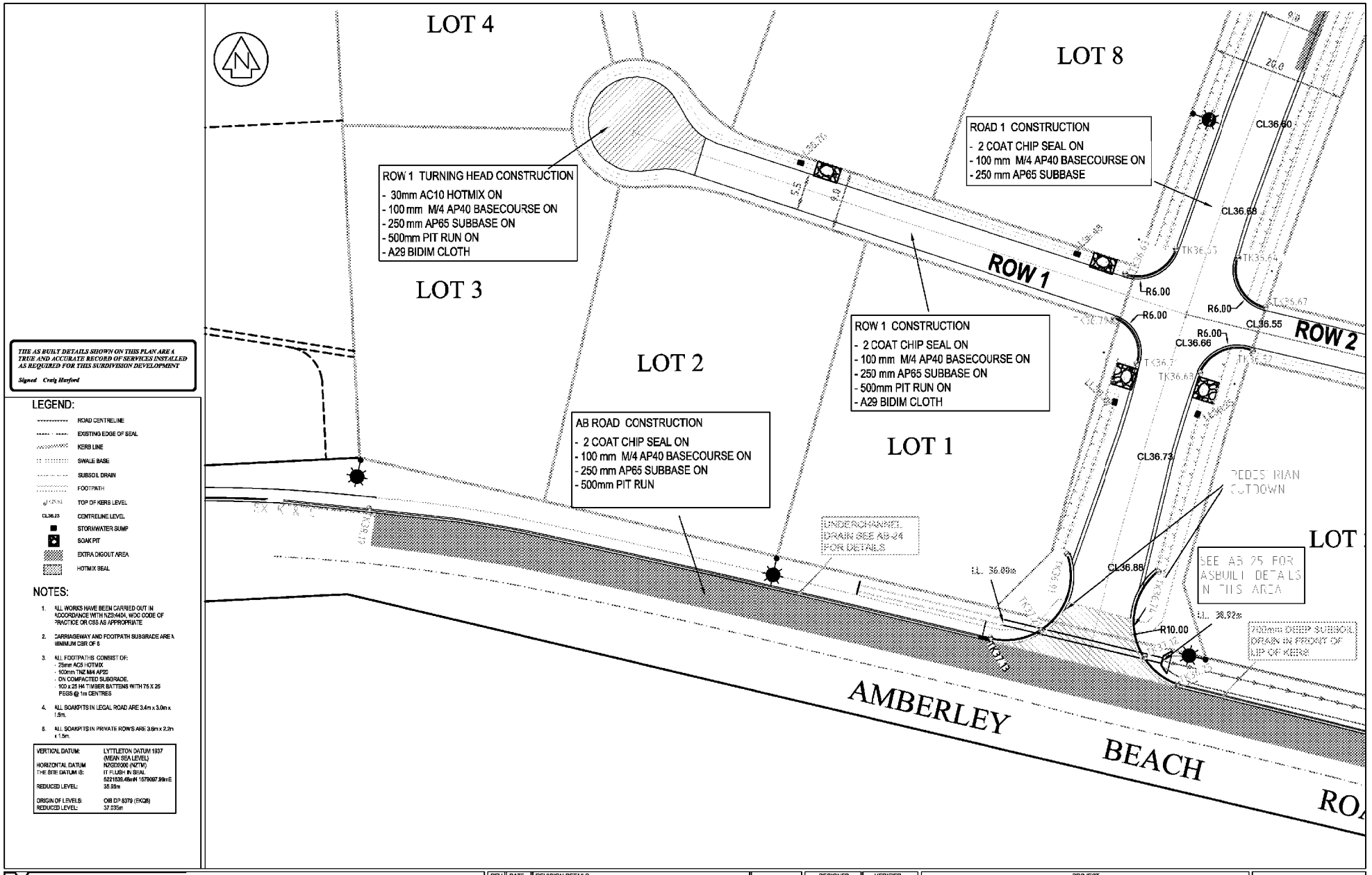

THE AS BUILT DETAILS SHOWN ON THIS PLAN ARE A TRUE AND ACCURATE RECORD OF SERVICES INSTALLED AS REQUIRED FOR THIS SUBDIVISION DEVELOPMENT

Signed Craig Hurford

LEGEND:

- ROAD CENTRELINE
- EXISTING EDGE OF SEAL
- KERB LINE
- SWALE BASE
- SUBSOIL DRAIN
- FOOTPATH
- TOP OF KERB LEVEL
- CL36.23 CENTRELINE LEVEL
- STORMWATER SUMP
- SOAK PIT
- EXTRA DIGOUT AREA
- HOTMIX SEAL

NOTES:

1. ALL WORKS HAVE BEEN CARRIED OUT IN ACCORDANCE WITH NZS-4404, WDC CODE OF PRACTICE OR CSS AS APPROPRIATE
2. CARRIAGEWAY AND FOOTPATH SUBGRADE ARE A MINIMUM CBR OF 5
3. ALL FOOTPATHS CONSIST OF:
   - 25mm AC5 HOTMIX
   - 100mm TNZ M/4 AP20
   - ON COMPACTED SUBGRADE.
   - 100 x 25 H4 TIMBER BATTENS WITH 75 X 25 PEGS @ 1m CENTRES
4. ALL SOAKPITS IN LEGAL ROAD ARE 3.4m x 3.0m x 1.5m.
5. ALL SOAKPITS IN PRIVATE ROW'S ARE 3.6m x 2.2m x 1.5m.

VERTICAL DATUM:	LYTTLETON DATUM 1937 (MEAN SEA LEVEL)
HORIZONTAL DATUM	NZGD2000 (NZTM)
THE SITE DATUM IS:	IT FLUSH IN SEAL 5221635.45mN 1579697.99mE
REDUCED LEVEL:	35.99m
ORIGIN OF LEVELS:	CNB DP 6379 (EKQ6)
REDUCED LEVEL:	37.035m

SURVUS CONSULTANTS
surveying engineering property development
4 Meadow Street, PO Box 5558, Papanui, Christchurch
P 03 352 5599 AMBERLEY 03 314 9200
F 03 352 5527 ASHBURTON 03 307 7021
TOLL FREE 0508 787 887 DARFIELD 03 318 8151

REV	DATE	REVISION DETAILS	
B	25/11/15	NOTES ADDED	C HURFORD
A	17/11/15	ISSUE FOR INFORMATION	C HURFORD

DESIGNED CWH | VERIFIED JC

APPROVED C HURFORD DATE 17/11/15 C HURFORD

PROJECT: LMM INVESTMENTS LTD 47 DOUBLE CORNER ROAD

TITLE: ROADING ASBUILT PLAN SHEET 1 OF 7

FOR INFORMATION

PROJECT NO 11713

SCALE 1:250 @ A1 1:500 @ A3 | SIZE A1

DRAWING NO AB-17 | REV B

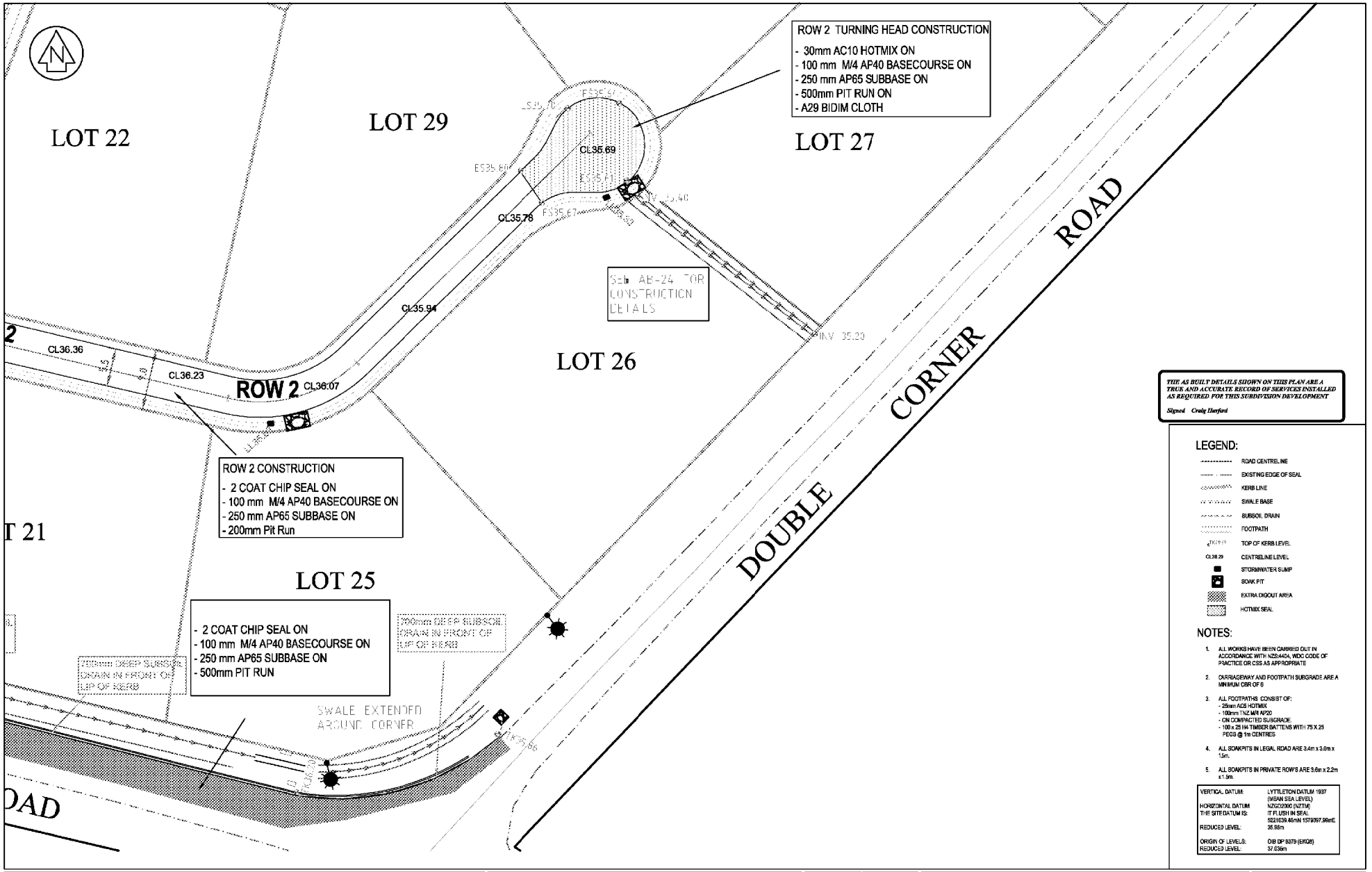

SURVUS CONSULTANTS
surveying engineering property development
4 Meadow Street, PO Box 5558, Papanui, Christchurch
P 03 352 5599 AMBERLEY 03 314 9200
F 03 352 5527 ASHBURTON 03 307 7021
TOLL FREE 0508 787 887 TIMARU 03 318 6151

REV	DATE	REVISION DETAILS	
B	25/11/15	NOTES ADDED	C HURFORD
A	17/11/15	ISSUE FOR INFORMATION	C HURFORD

DESIGNED CWH | VERIFIED JC

APPROVED C HURFORD DATE 17/11/15 C HURFORD

PROJECT: LMM INVESTMENTS LTD 47 DOUBLE CORNER ROAD

TITLE: ROADING ASBUILT PLAN SHEET 2 OF 7

FOR INFORMATION

PROJECT NO 11713

SCALE 1:250 @ A1 1:500 @ A3 | SIZE A1

DRAWING NO AB-18 | REV B

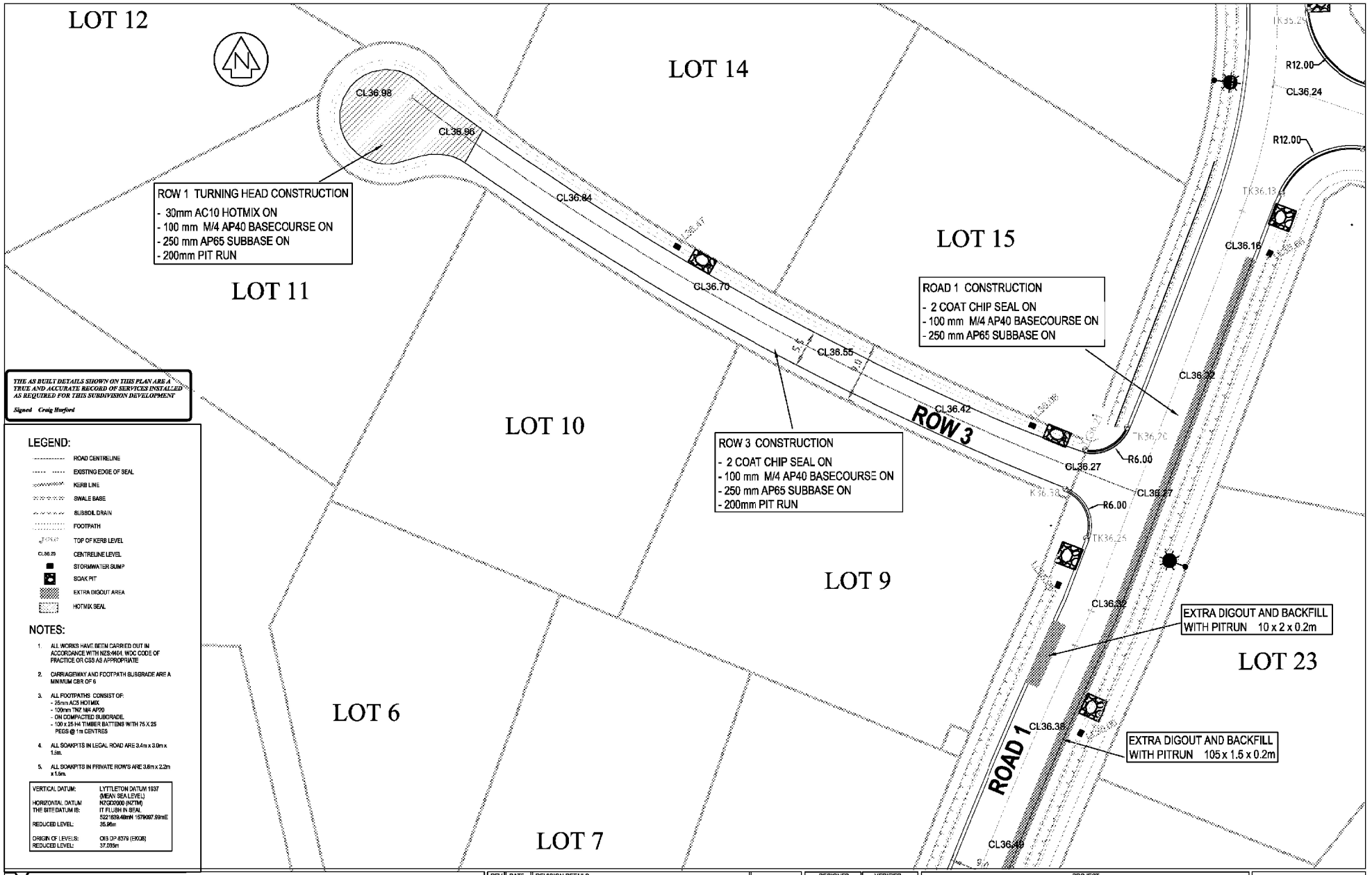

SURVUS CONSULTANTS
surveying engineering property development
4 Meadow Street, PO Box 5558, Papanui, Christchurch
P 03 352 5599 MOBILE 03 314 9200
F 03 352 5527 ASHBURTON 03 307 7021
TOLL FREE 0508 787 887 DARFIELD 03 318 6151

REV	DATE	REVISION DETAILS	
B	25/11/15	NOTES ADDED	C HURFORD
A	17/11/15	ISSUE FOR INFORMATION	C HURFORD

DESIGNED CWH | VERIFIED JC
APPROVED C HURFORD DATE 17/11/15 C HURFORD

PROJECT: LMM INVESTMENTS LTD 47 DOUBLE CORNER ROAD
TITLE: ROADING ASBUILT PLAN SHEET 3 OF 7

FOR INFORMATION
PROJECT NO 11713
SCALE 1:250 @ A1 1:500 @ A3 | SIZE A1
DRAWING NO AB-19 | REV B

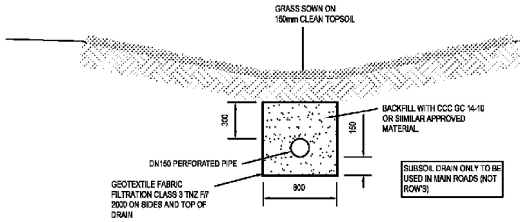

ROAD 1 AND 2 SWALE SUBSOIL DRAIN
SCALE 1:20

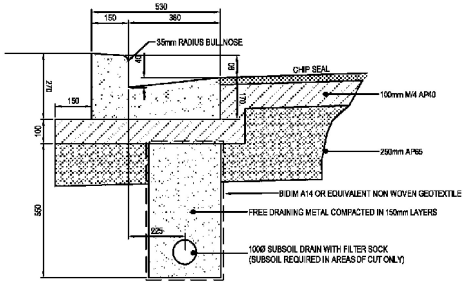

AMBERLEY BEACH ROAD UNDERCHANNEL DRAIN DETAIL
SCALE 1:10

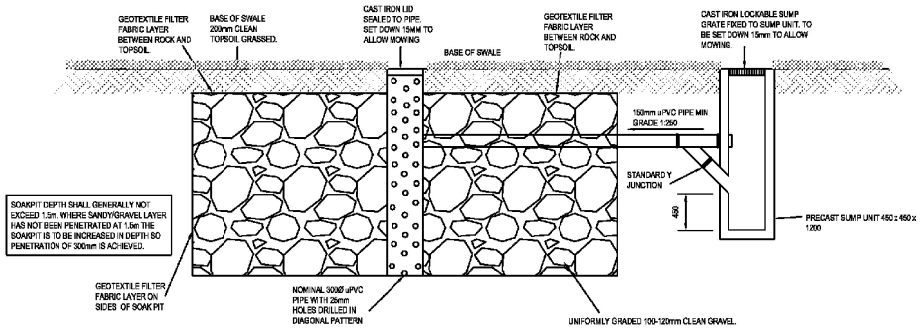

TYPICAL SUMP AND SOAKPIT SECTION
SCALE 1:20

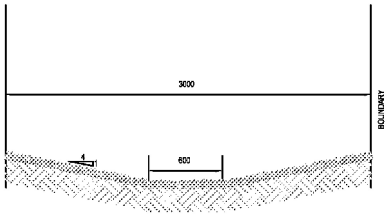

SECTION A-A
1:20

DRAINAGE SWALE LOT 26

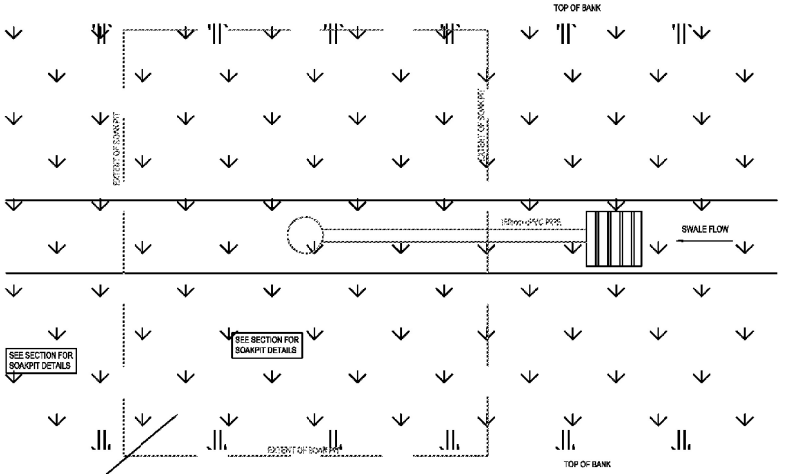

TYPICAL SUMP AND SOAKPIT PLAN
SCALE 1:20

THE AS BUILT DETAILS SHOWN ON THIS PLAN ARE A TRUE AND ACCURATE RECORD OF SERVICES INSTALLED AS REQUIRED FOR THIS SUBDIVISION DEVELOPMENT

Signed Craig Hurford

SURVUS CONSULTANTS
surveying engineering property development
4 Meadow Street, PO Box 5558, Papanui, Christchurch
P 03 352 5599 AMBERLEY 03 314 9200
F 03 352 5527 ASHBURTON 03 307 7021
TOLL FREE 0508 787 887 TIMARU 03 318 6151

REV	DATE	REVISION DETAILS	
B	25/11/15	NOTES ADDED	C HURFORD
A	17/11/15	ISSUE FOR INFORMATION	C HURFORD

DESIGNED CWH | VERIFIED JC

APPROVED
C HURFORD DATE 17/11/15
C HURFORD

PROJECT
LMM INVESTMENTS LTD - 47 DOUBLE CORNER ROAD

TITLE
ASBUILT STORMWATER DETAILS
SHEET 1 OF 1

FOR INFORMATION

PROJECT NO
11713

SCALE
1:250 @ A1 1:500 @ A3

SIZE
A1

DRAWING NO
AB-24

REV
B

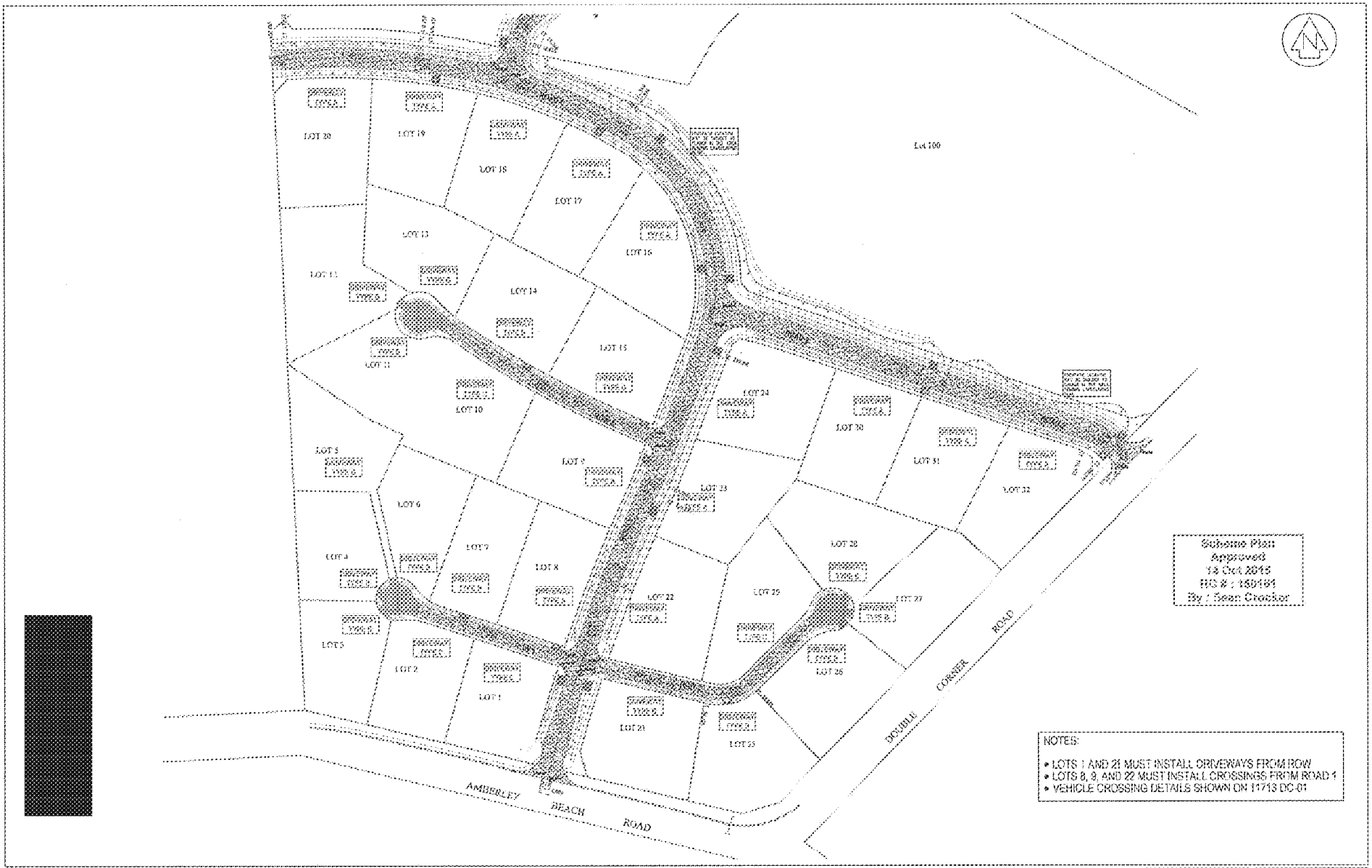

SURVUS CONSULTANTS

4 Meadow Street, PO Box 5558, Papanui, Christchurch
03 352 5599 03 214 5200
03 352 6627 03 307 7021
0508 787 887 03 316 8151

REV	DATE	REVISION DETAILS	
1	08/09/15	FOR CONSTRUCTION	C HURFORD
A	04/09/15	ISSUE FOR CONSENT	C HURFORD

DESIGNED CWM | VERIFIED JC

APPROVED C HURFORD DATE 04/09/15 C HURFORD

PROJECT: LMM INVESTMENTS LTD 47 DOUBLE CORNER ROAD

TITLE: VEHICLE CROSSING PLAN

PROJECT NO 11713

SCALE 1:700 @ A1 1:1500 @ A3 | SIZE A1

DRAWING NO DP-01 | REV 1

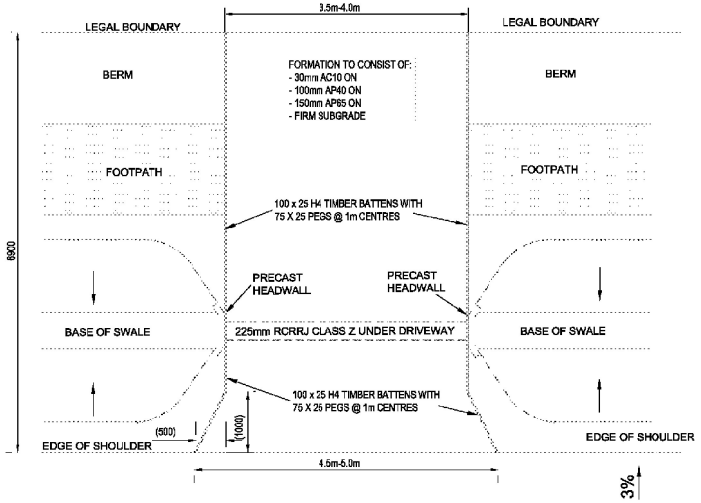

TYPICAL DRIVEWAY "A" PLAN

SCALE 1:40

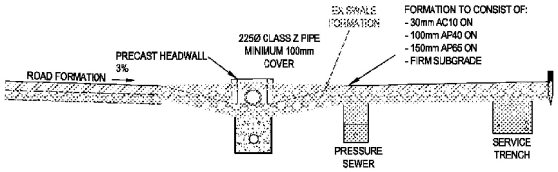

TYPICAL DRIVEWAY "A" SECTION

SCALE 1:40

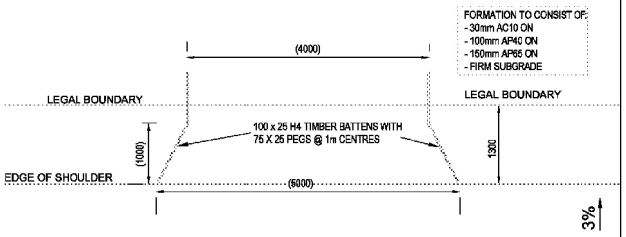

TYPICAL DRIVEWAY "C" PLAN (NO SWALE)

SCALE 1:40

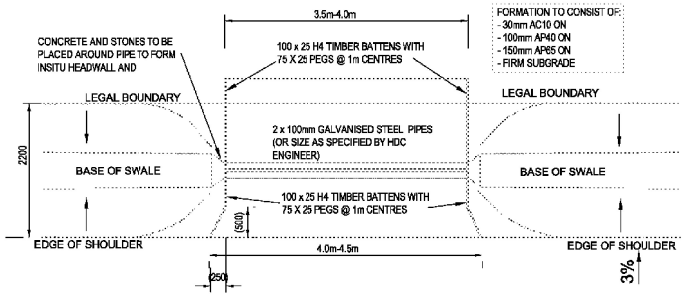

TYPICAL DRIVEWAY "B" PLAN

SCALE 1:40

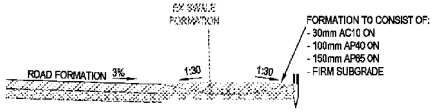

TYPICAL DRIVEWAY "B" SECTION

SCALE 1:40

SURVUS CONSULTANTS
surveying engineering property development
4 Meadow Street, PO Box 5558, Papanui, Christchurch
P 03 352 5599 AKAROA 03 314 9200
F 03 352 5527 ASHBURTON 03 307 7021
TOLL FREE 0508 787 887 TIMARU 03 318 6151

REV	DATE	REVISION DETAILS	
2	29/05/15	UPDATED DRIVEWAY B	C HURFORD
1	06/05/15	FOR CONSTRUCTION	C HURFORD
A	04/05/15	FOR CONSENT	C HURFORD

DESIGNED	VERIFIED
CWH	JC

APPROVED

C HURFORD DATE 04/05/15

C HURFORD

PROJECT

LMM INVESTMENTS 2012 LIMITED - 57 DOUBLE CORNER ROAD

TITLE

VEHICLE CROSSING DETAILS

FOR CONSTRUCTION

PROJECT NO 11713

SCALE AS SHOWN | SIZE A1

DRAWING NO DD-01 | REV 2

Environment Canterbury Regional Council
Kaunihera Taiao ki Waitaha

Customer Services
P. 03 353 9007 or 0800 324 636

PO Box 345
Christchurch 8140

P. 03 365 3828
F. 03 365 3194
E. ecinfo@ecan.govt.nz

www.ecan.govt.nz

Dear Sir/Madam

Thank you for submitting your property enquiry in regards to our Listed Land Use Register (LLUR) which holds information about sites that have been used, or are currently used for activities which have the potential to have caused contamination.

The LLUR statement provided indicates the location of the land parcel(s) you enquired about and provides information regarding any LLUR sites within a radius specified in the statement of this land.

Please note that if a property is not currently entered on the LLUR, it does not mean that an activity with the potential to cause contamination has never occurred, or is not currently occurring there. The LLUR is not complete, and new sites are regularly being added as we receive information and conduct our own investigations into current and historic land uses.

The LLUR only contains information held by Environment Canterbury in relation to contaminated or potentially contaminated land; other information relevant to potential contamination may be held in other files (for example consent and enforcement files).

If your enquiry relates to a farm property, please note that many current and past activities undertaken on farms may not be listed on the LLUR. Activities such as the storage, formulation and disposal of pesticides, offal pits, foot rot troughs, animal dips and underground or above ground fuel tanks have the potential to cause contamination.

Please contact and Environment Canterbury Contaminated Sites Officer if you wish to discuss the contents of the LLUR statement, or if you require additional information.
For any other information regarding this land please contact Environment Canterbury Customer Services.

Yours sincerely

Contaminated Sites Team

Property Statement
from the Listed Land Use Register

Visit www.ecan.govt.nz/HAIL for more information about land uses.

Environment Canterbury Regional Council
Kaunihera Taiao ki Waitaha

Customer Services
P. 03 353 9007 or 0800 324 636

PO Box 345
Christchurch 8140

P. 03 365 3828
F. 03 365 3194
E. ecinfo@ecan.govt.nz

www.ecan.govt.nz

Date:	03 December 2020	
Land Parcels:	Lot 25 DP 488914	Valuation No(s): 2143003127

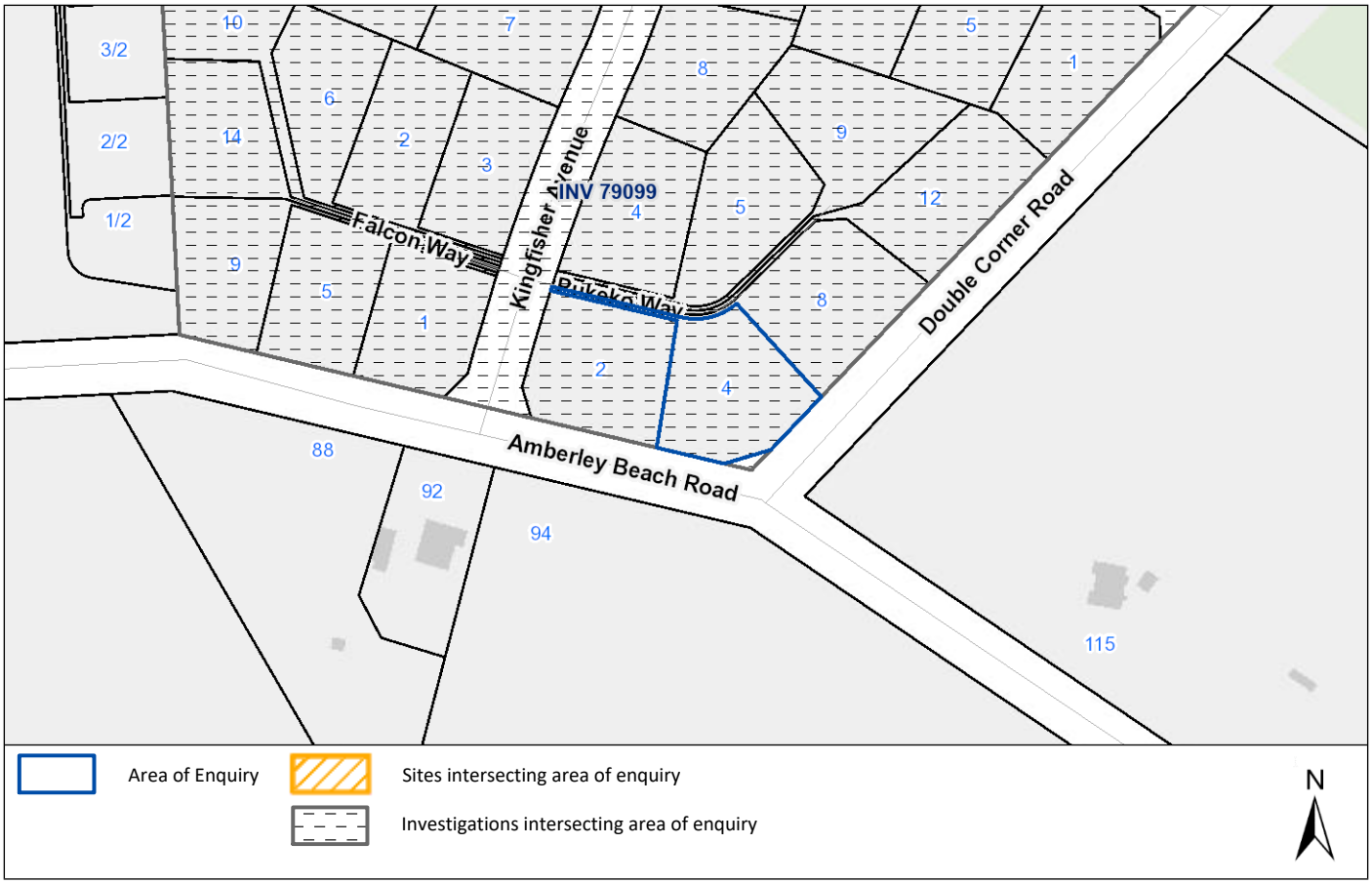

The information presented in this map is specific to the property you have selected. Information on nearby properties may not be shown on this map, even if the property is visible.

Summary of sites:

There are no sites associated with the area of enquiry.

Information held about the sites on the Listed Land Use Register

There are no sites associated with the area of enquiry.

Information held about other investigations on the Listed Land Use Register

15 Aug 2014 **INV 79099: Preliminary Contamination Site Investigation Report: Lot 2 DP 323616, 47 Double Corner Road, Amberley** (Preliminary Site Investigation)
Land Development and Exploration Ltd

Summary of investigation(s):

Environment Canterbury has received a Preliminary Site Investigation report that includes all or part of the property you have selected.

A Preliminary Site Investigation seeks to identify potential sources of contamination resulting from current and historical land uses.

The preliminary site investigation may not have found any potential sources of contamination on the property you have enquired about. Where potential sources of contamination have been identified, a site identification number (e.g. SIT 1234) and land uses from the Hazardous Activities and Industries List (HAIL) will be shown on your statement.

This investigation has not been summarised.

For further information from Environment Canterbury, contact Customer Services and refer to enquiry number ENQ269674.

Disclaimer: ***The enclosed information is derived from Environment Canterbury's Listed Land Use Register and is made available to you under the Local Government Official Information and Meetings Act 1987 and Environment Canterbury's Contaminated Land Information Management Strategy (ECan 2009).***

The information contained in this report reflects the current records held by Environment Canterbury regarding the activities undertaken on the site, its possible contamination and based on that information, the categorisation of the site. Environment Canterbury has not verified the accuracy or completeness of this information. It is released only as a copy of Environment Canterbury's records and is not intended to provide a full, complete or totally accurate assessment of the site. It is provided on the basis that Environment Canterbury makes no warranty or representation regarding the reliability, accuracy or completeness of the information provided or the level of contamination (if any) at the relevant site or that the site is suitable or otherwise for any particular purpose. Environment Canterbury accepts no responsibility for any loss, cost, damage or expense any person may incur as a result of the use, reference to or reliance on the information contained in this report.

Any person receiving and using this information is bound by the provisions of the Privacy Act 1993.

Environment Canterbury Regional Council
Kaunihera Taiao ki Waitaha

Listed Land Use Register

What you need to know



Everything is connected

What is the Listed Land Use Register (LLUR)?

The LLUR is a database that Environment Canterbury uses to manage information about land that is, or has been, associated with the use, storage or disposal of hazardous substances.

Why do we need the LLUR?

Some activities and industries are hazardous and can potentially contaminate land or water. We need the LLUR to help us manage information about land which could pose a risk to your health and the environment because of its current or former land use.

Section 30 of the Resource Management Act (RMA, 1991) requires Environment Canterbury to investigate, identify and monitor contaminated land. To do this we follow national guidelines and use the LLUR to help us manage the information.

The information we collect also helps your local district or city council to fulfil its functions under the RMA. One of these is implementing the National Environmental Standard (NES) for Assessing and Managing Contaminants in Soil, which came into effect on 1 January 2012.

For information on the NES, contact your city or district council.

How does Environment Canterbury identify sites to be included on the LLUR?

We identify sites to be included on the LLUR based on a list of land uses produced by the Ministry for the Environment (MfE). This is called the Hazardous Activities and Industries List (HAIL)[1]. The HAIL has 53 different activities, and includes land uses such as fuel storage sites, orchards, timber treatment yards, landfills, sheep dips and any other activities where hazardous substances could cause land and water contamination.

We have two main ways of identifying HAIL sites:

- We are actively identifying sites in each district using historic records and aerial photographs. This project started in 2008 and is ongoing.
- We also receive information from other sources, such as environmental site investigation reports submitted to us as a requirement of the Regional Plan, and in resource consent applications.

[1] The Hazardous Activities and Industries List (HAIL) can be downloaded from MfE's website www.mfe.govt.nz, keyword search HAIL

How does Environment Canterbury classify sites on the LLUR?

Where we have identified a HAIL land use, we review all the available information, which may include investigation reports if we have them. We then assign the site a category on the LLUR. The category is intended to best describe what we know about the land use and potential contamination at the site and is signed off by a senior staff member.

Please refer to the Site Categories and Definitions factsheet for further information.

What does Environment Canterbury do with the information on the LLUR?

The LLUR is available online at www.llur.ecan.govt.nz. We mainly receive enquiries from potential property buyers and environmental consultants or engineers working on sites. An inquirer would typically receive a summary of any information we hold, including the category assigned to the site and a list of any investigation reports.

We may also use the information to prioritise sites for further investigation, remediation and management, to aid with planning, and to help assess resource consent applications. These are some of our other responsibilities under the RMA.

If you are conducting an environmental investigation or removing an underground storage tank at your property, you will need to comply with the rules in the Regional Plan and send us a copy of the report. This means we can keep our records accurate and up-to-date, and we can assign your property an appropriate category on the LLUR. To find out more, visit www.ecan.govt.nz/HAIL.

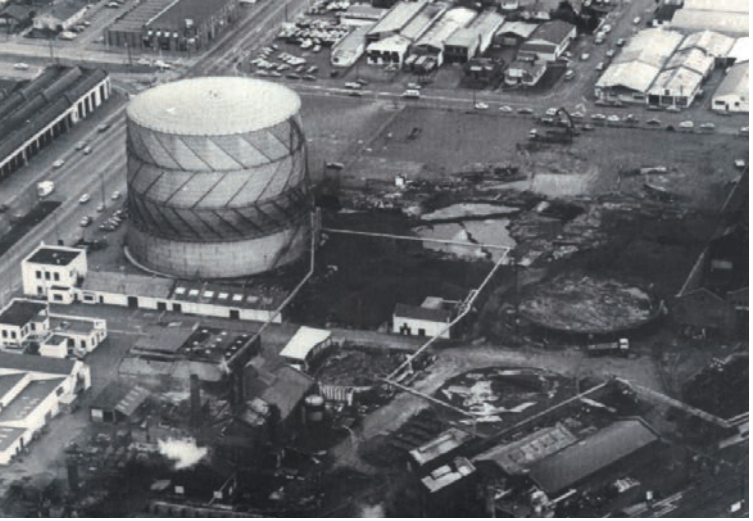

IMPORTANT!

The LLUR is an online database which we are continually updating. A property may not currently be registered on the LLUR, but this does not necessarily mean that it hasn't had a HAIL use in the past.

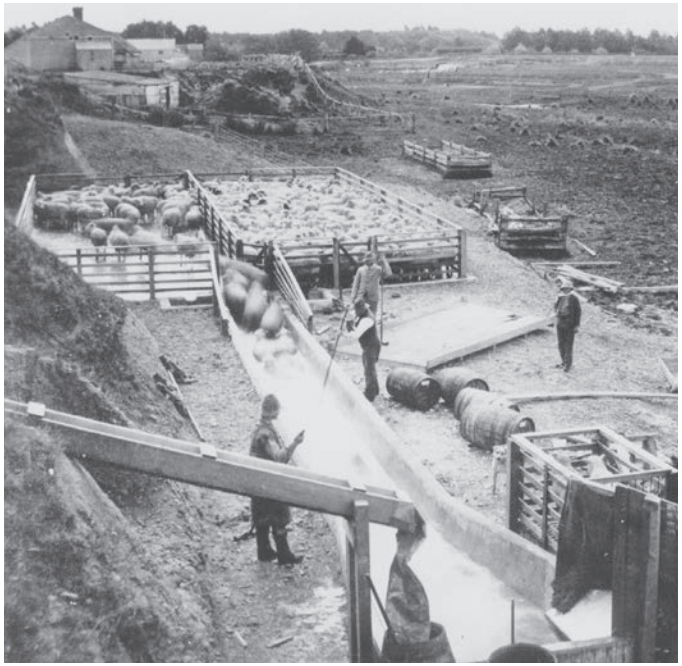

Sheep dipping (ABOVE) and gas works (TOP) are among the former land uses that have been identified as potentially hazardous. (Photo above by Wheeler & Son in 1987, courtesy of Canterbury Museum.)

My land is on the LLUR – what should I do now?

IMPORTANT! Just because your property has a land use that is deemed hazardous or is on the LLUR, it doesn't necessarily mean it's contaminated. The only way to know if land is contaminated is by carrying out a detailed site investigation, which involves collecting and testing soil samples.

You do not need to do anything if your land is on the LLUR and you have no plans to alter it in any way. It is important that you let a tenant or buyer know your land is on the Listed Land Use Register if you intend to rent or sell your property. If you are not sure what you need to tell the other party, you should seek legal advice.

You may choose to have your property further investigated for your own peace of mind, or because you want to do one of the activities covered by the National Environmental Standard for Assessing and Managing Contaminants in Soil. Your district or city council will provide further information.



If you wish to engage a suitably qualified experienced practitioner to undertake a detailed site investigation, there are criteria for choosing a practitioner on www.ecan.govt.nz/HAIL.

I think my site category is incorrect – how can I change it?

If you have an environmental investigation undertaken at your site, you must send us the report and we will review the LLUR category based on the information you provide. Similarly, if you have information that clearly shows your site has not been associated with HAIL activities (eg. a preliminary site investigation), or if other HAIL activities have occurred which we have not listed, we need to know about it so that our records are accurate.

If we have incorrectly identified that a HAIL activity has occurred at a site, it will be not be removed from the LLUR but categorised as Verified Non-HAIL. This helps us to ensure that the same site is not re-identified in the future.

Contact us

Property owners have the right to look at all the information Environment Canterbury holds about their properties.

It is free to check the information on the LLUR, online at www.llur.ecan.govt.nz.

If you don't have access to the internet, you can enquire about a specific site by phoning us on (03) 353 9007 or toll free on 0800 EC INFO (32 4636) during business hours.

Contact Environment Canterbury:

Email: ecinfo@ecan.govt.nz

Phone:
Calling from Christchurch: (03) 353 9007
Calling from any other area: 0800 EC INFO (32 4636)

Environment Canterbury Regional Council
Kaunihera Taiao ki Waitaha

Everything is connected

Promoting quality of life through balanced resource management.

www.ecan.govt.nz E13/101

Listed Land Use Register

Site categories and definitions

When Environment Canterbury identifies a Hazardous Activities and Industries List (HAIL) land use, we review the available information and assign the site a category on the Listed Land Use Register. The category is intended to best describe what we know about the land use.

If a site is categorised as **Unverified** it means it has been reported or identified as one that appears on the HAIL, but the land use has not been confirmed with the property owner.

If the land use has been confirmed but analytical information from the collection of samples is not available, and the presence or absence of contamination has therefore not been determined, the site is registered as:

Not investigated:

- A site whose past or present use has been reported and verified as one that appears on the HAIL.
- The site has not been investigated, which might typically include sampling and analysis of site soil, water and/or ambient air, and assessment of the associated analytical data.
- There is insufficient information to characterise any risks to human health or the environment from those activities undertaken on the site. Contamination may have occurred, but should not be assumed to have occurred.

If analytical information from the collection of samples is available, the site can be registered in one of six ways:

At or below background concentrations:

The site has been investigated or remediated. The investigation or post remediation validation results confirm there are no hazardous substances above local background concentrations other than those that occur naturally in the area. The investigation or validation sampling has been sufficiently detailed to characterise the site.

Below guideline values for:

The site has been investigated. Results show that there are hazardous substances present at the site but indicate that any adverse effects or risks to people and/or the environment are considered to be so low as to be acceptable. The site may have been remediated to reduce contamination to this level, and samples taken after remediation confirm this.

Environment Canterbury Regional Council
Kaunihera Taiao ki Waitaha

Managed for:

The site has been investigated. Results show that there are hazardous substances present at the site in concentrations that have the potential to cause adverse effects or risks to people and/or the environment. However, those risks are considered managed because:

- the nature of the use of the site prevents human and/or ecological exposure to the risks; and/or
- the land has been altered in some way and/or restrictions have been placed on the way it is used which prevent human and/or ecological exposure to the risks.

Partially investigated:

The site has been partially investigated. Results:

- demonstrate there are hazardous substances present at the site; however, there is insufficient information to quantify any adverse effects or risks to people or the environment; or
- do not adequately verify the presence or absence of contamination associated with all HAIL activities that are and/or have been undertaken on the site.

Significant adverse environmental effects:

The site has been investigated. Results show that sediment, groundwater or surface water contains hazardous substances that:

- have significant adverse effects on the environment; or
- are reasonably likely to have significant adverse effects on the environment.

Contaminated:

The site has been investigated. Results show that the land has a hazardous substance in or on it that:

- has significant adverse effects on human health and/or the environment; and/or
- is reasonably likely to have significant adverse effects on human health and/or the environment.

If a site has been included incorrectly on the Listed Land Use Register as having a HAIL, it will not be removed but will be registered as:

Verified non-HAIL:

Information shows that this site has never been associated with any of the specific activities or industries on the HAIL.

Please contact Environment Canterbury for further information:

(03) 353 9007 or toll free
on 0800 EC INFO (32 4636)
email ecinfo@ecan.govt.nz

Environment Canterbury Regional Council
Kaunihera Taiao ki Waitaha

E13/102

Title Plan - DP 488914

Survey Number	DP 488914
Surveyor Reference	11713
Surveyor	Craig William Hurford
Survey Firm	Survus Contracting Ltd
Surveyor Declaration	I Craig William Hurford, being a licensed cadastral surveyor, certify that: (a) this dataset provided by me and its related survey are accurate, correct and in accordance with the Cadastral Survey Act 2002 and the Rules for Cadastral Survey 2010, and (b)the survey was undertaken by me or under my personal direction. Declared on 24 Nov 2015 08:20 AM

Survey Details

Dataset Description	Lots 1-32, 100-102 and 200 being a subdivision of Lot 2 DP 323616 and easements over Lots 82 and 201 DP 485034		
Status	Deposited		
Land District	Canterbury	**Survey Class**	Class A
Submitted Date	24/11/2015	**Survey Approval Date**	25/11/2015
		Deposit Date	19/02/2016

Territorial Authorities

Hurunui District

Comprised In

CT 95082

CT 688510 (EO)

CT 688741 (EO)

Created Parcels

Parcels	Parcel Intent	Area	CT Reference
Area AE Deposited Plan 488914	Easement		
Area AF Deposited Plan 488914	Land Covenant		
Area AG Deposited Plan 488914	Easement		
Area AH Deposited Plan 488914	Land Covenant		
Area AI Deposited Plan 488914	Land Covenant		
Area AJ Deposited Plan 488914	Land Covenant		
Area AK Deposited Plan 488914	Land Covenant		
Area AL Deposited Plan 488914	Land Covenant		
Area AM Deposited Plan 488914	Land Covenant		
Area AN Deposited Plan 488914	Easement		
Area AO Deposited Plan 488914	Land Covenant		
Area AP Deposited Plan 488914	Land Covenant		
Lot 1 Deposited Plan 488914	Fee Simple Title	0.1847 Ha	713202
Lot 2 Deposited Plan 488914	Fee Simple Title	0.1971 Ha	713203
Lot 3 Deposited Plan 488914	Fee Simple Title	0.1947 Ha	713204
Lot 4 Deposited Plan 488914	Fee Simple Title	0.1953 Ha	713205
Lot 5 Deposited Plan 488914	Fee Simple Title	0.2155 Ha	713206

Title Plan - DP 488914

Created Parcels

Parcels	Parcel Intent	Area	CT Reference
Lot 6 Deposited Plan 488914	Fee Simple Title	0.1918 Ha	713207
Lot 7 Deposited Plan 488914	Fee Simple Title	0.1932 Ha	713208
Lot 8 Deposited Plan 488914	Fee Simple Title	0.1856 Ha	713209
Lot 9 Deposited Plan 488914	Fee Simple Title	0.2302 Ha	713210
Lot 10 Deposited Plan 488914	Fee Simple Title	0.2291 Ha	713211
Lot 11 Deposited Plan 488914	Fee Simple Title	0.2358 Ha	713212
Lot 12 Deposited Plan 488914	Fee Simple Title	0.2748 Ha	713213
Lot 13 Deposited Plan 488914	Fee Simple Title	0.2304 Ha	713214
Lot 14 Deposited Plan 488914	Fee Simple Title	0.2406 Ha	713215
Lot 15 Deposited Plan 488914	Fee Simple Title	0.2183 Ha	713216
Lot 16 Deposited Plan 488914	Fee Simple Title	0.2175 Ha	713217
Lot 17 Deposited Plan 488914	Fee Simple Title	0.2155 Ha	713218
Lot 18 Deposited Plan 488914	Fee Simple Title	0.2128 Ha	713219
Lot 19 Deposited Plan 488914	Fee Simple Title	0.2088 Ha	713220
Lot 20 Deposited Plan 488914	Fee Simple Title	0.2316 Ha	713221
Lot 21 Deposited Plan 488914	Fee Simple Title	0.2225 Ha	713222
Lot 22 Deposited Plan 488914	Fee Simple Title	0.2181 Ha	713223
Lot 23 Deposited Plan 488914	Fee Simple Title	0.2136 Ha	713224
Lot 24 Deposited Plan 488914	Fee Simple Title	0.2210 Ha	713225
Lot 25 Deposited Plan 488914	Fee Simple Title	0.2246 Ha	713226
Lot 26 Deposited Plan 488914	Fee Simple Title	0.2428 Ha	713227
Lot 27 Deposited Plan 488914	Fee Simple Title	0.2400 Ha	713228
Lot 28 Deposited Plan 488914	Fee Simple Title	0.2495 Ha	713229
Lot 29 Deposited Plan 488914	Fee Simple Title	0.2261 Ha	713230
Lot 30 Deposited Plan 488914	Fee Simple Title	0.2026 Ha	713231
Lot 31 Deposited Plan 488914	Fee Simple Title	0.2070 Ha	713232
Lot 32 Deposited Plan 488914	Fee Simple Title	0.2100 Ha	713233
Lot 100 Deposited Plan 488914	Vesting on Deposit for Recreation Reserve (Territorial Authority)	3.7408 Ha	713234
	Road	1.3637 Ha	
	Road	0.0043 Ha	
Lot 200 Deposited Plan 488914	Fee Simple Title	7.2930 Ha	713235
Area A Deposited Plan 488914	Easement		
Area B Deposited Plan 488914	Easement		
Area C Deposited Plan 488914	Easement		
Area D Deposited Plan 488914	Easement		
Area E Deposited Plan 488914	Easement		
Area F Deposited Plan 488914	Easement		
Area G Deposited Plan 488914	Easement		
Area H Deposited Plan 488914	Easement		
Area I Deposited Plan 488914	Easement		
Area J Deposited Plan 488914	Easement		
Area K Deposited Plan 488914	Easement		

Title Plan - DP 488914

Created Parcels

Parcels	Parcel Intent	Area	CT Reference
Area L Deposited Plan 488914	Easement		
Area M Deposited Plan 488914	Easement		
Area N Deposited Plan 488914	Easement		
Area P Deposited Plan 488914	Easement		
Area Q Deposited Plan 488914	Easement		
Area R Deposited Plan 488914	Easement		
Area S Deposited Plan 488914	Easement		
Area T Deposited Plan 488914	Easement		
Area U Deposited Plan 488914	Easement		
Area V Deposited Plan 488914	Easement		
Area W Deposited Plan 488914	Easement		
Area X Deposited Plan 488914	Easement		
Area Y Deposited Plan 488914	Easement		
Area Z Deposited Plan 488914	Easement		
Area AA Deposited Plan 488914	Easement		
Area AB Deposited Plan 488914	Easement		
Area AC Deposited Plan 488914	Easement		
Area AD Deposited Plan 488914	Easement		
Area AQ Deposited Plan 488914	Easement		
Area AR Deposited Plan 488914	Easement		
Total Area		19.3829 Ha	

Council Ref: 140160 and 140196
Surveyor Ref: 11713

Land Registration District
Canterbury

Plan Number
488914

Territorial Authority
Hurunui District Council

Memorandum of Easements
(Pursuant to s243 Resource Management Act 1991)

Purpose	Servient Tenement	Shown	Dominant Tenement/Grantee
Right of way, right to drain water and sewage, right to convey water, electricity, telecommunications and computer media	Lot 1	A	Lots 2, 3, 4, 5, 6 and 7
	Lot 2	B	Lots 1, 3, 4, 5, 6 and 7
	Lot 3	C	Lots 1, 2, 4, 5, 6 and 7
	Lot 4	D	Lots 1, 2, 3, 5, 6 and 7
	Lot 5	E	Lots 1, 2, 3, 4, 6 and 7
	Lot 6	F	Lots 1, 2, 3, 4, 5 and 7
	Lot 7	G	Lots 1, 2, 3, 4, 5 and 6
	Lot 10	H	Lots 11, 12, 13, 14 and 15
	Lot 11	I	Lots 10, 12, 13, 14 and 15
	Lot 12	J	Lots 10, 11, 13, 14 and 15
	Lot 13	K	Lots 10, 11, 12, 14 and 15
	Lot 14	L	Lots 10, 11, 12, 13 and 15
	Lot 15	M	Lots 10, 11, 12, 13 and 14
	Lot 21	N	Lots 25, 26, 27, 28 and 29
	Lot 25	P	Lots 21, 26, 27, 28 and 29
	Lot 26	Q	Lots 21, 25, 27, 28 and 29
	Lot 27	S	Lots 21, 25, 26, 28 and 29
	Lot 28	T	Lots 21, 25, 26, 27 and 29
	Lot 29	U	Lots 21, 25, 26, 27 and 28
Right to drain water	Lot 26	R, AN	Lots 21, 25, 27, 28 and 29

Memorandum of Easements (Pursuant to s243 Resource Management Act 1991)			
Purpose	**Servient Tenement**	**Shown**	**Dominant Tenement/Grantee**
Right to drain water and sewage, right to convey water, electricity, telecommunications and computer media	Lot 1	A	Lot 8
	Lot 2	B	
	Lot 3	C	
	Lot 4	D	
	Lot 5	E	
	Lot 6	F	
	Lot 7	G	
	Lot 10	H	Lot 9
	Lot 11	I	
	Lot 12	J	
	Lot 13	K	
	Lot 14	L	
	Lot 15	M	
	Lot 21	N	Lot 22
	Lot 25	P	
	Lot 26	Q	
	Lot 27	S	
	Lot 28	T	
	Lot 29	U	

NOTE: Areas AF, AG, AH, AI, AJ,AK, AL, AM, AN, AO, AP and AQ are subject to proposed Land Covenants

Surveyor Ref: 11713

Land Registration District
Canterbury

Plan Number
488914

Territorial Authority
Hurunui District Council

Memorandum of Easements to Surrender

Purpose	Servient Tenement	Shown	Dominant Tenement	Document
Right to convey water	Lot 2 DP 323616	A on DP 331914	Lot 1 DP 323616	EI 6038416.3

Council Ref: 140160 and 140196
Surveyor Ref: 11713

Land Registration District
Canterbury

Plan Number
488914

Territorial Authority
Hurunui District Council

Memorandum of Easements in gross
(Pursuant to s243 Resource Management Act 1991)

Purpose	Servient Tenement	Shown	Dominant Tenement/Grantee
Right to convey telecommunications and computer media in gross	Lot 1	A	Chorus New Zealand Limited
	Lot 2	B	
	Lot 3	C	
	Lot 4	D	
	Lot 5	E	
	Lot 6	F	
	Lot 7	G	
	Lot 10	H	
	Lot 11	I	
	Lot 12	J	
	Lot 13	K	
	Lot 14	L	
	Lot 15	M	
	Lot 21	N	
	Lot 25	P	
	Lot 26	Q	
	Lot 27	S	
	Lot 28	T	
	Lot 29	U	
Right to drain water in gross	Lot 26	R	Hurunui District Council

Memorandum of Easements in gross (Pursuant to s243 Resource Management Act 1991)			
Right to convey water in gross	Lot 1	A	Hurunui District Council
	Lot 2	B	
	Lot 3	C	
	Lot 4	D	
	Lot 5	E	
	Lot 6	F	
	Lot 7	G	
	Lot 10	H	
	Lot 11	I	
	Lot 12	J	
	Lot 13	K	
	Lot 14	L	
	Lot 15	M	
	Lot 21	N	
	Lot 25	P	
	Lot 26	Q	
	Lot 27	S	
	Lot 28	T	
	Lot 29	U	
	Lot 20	W, Z	
	Lot 12	AA	
	Lot 11	AB	
	Lot 5	AC	
	Lot 4	AD	
	Lot 3	AE, AG	
	Lot 2	AQ	

Memorandum of Easements in gross (Pursuant to s243 Resource Management Act 1991)			
Right to drain sewage in gross	Lot 1	A	Hurunui District Council
	Lot 2	B	
	Lot 3	C	
	Lot 4	D	
	Lot 5	E	
	Lot 6	F	
	Lot 7	G	
	Lot 10	H	
	Lot 11	I	
	Lot 12	J	
	Lot 13	K	
	Lot 14	L	
	Lot 15	M	
	Lot 21	N	
	Lot 25	P	
	Lot 26	Q	
	Lot 27	S	
	Lot 28	T	
	Lot 29	U	
	Lot 20	W	
	Lot 82 DP 485034	X	
	Lot 201 DP 485034	Y	

Memorandum of Easements in gross (Pursuant to s243 Resource Management Act 1991)			
Purpose	**Servient Tenement**	**Shown**	**Dominant Tenement/Grantee**
Right to convey electricity in gross	Lot 1	A	Mainpower New Zealand Limited
	Lot 2	B	
	Lot 3	C	
	Lot 4	D	
	Lot 5	E	
	Lot 6	F	
	Lot 7	G	
	Lot 10	H	
	Lot 11	I	
	Lot 12	J	
	Lot 13	K	
	Lot 14	L	
	Lot 15	M	
	Lot 21	N	
	Lot 25	P	
	Lot 26	Q	
	Lot 27	S	
	Lot 28	T	
	Lot 29	U	
	Lot 9	V	

Our Ref: 11713

Land Registration District	Plan Number
Canterbury	488914

Territorial Authority (the Council)

Hurunui District Council

Schedule of Existing Easements			
Purpose	Servient Tenement	Shown	Document
Right to convey electricity	Lot 200	AR	EI 6038416.3

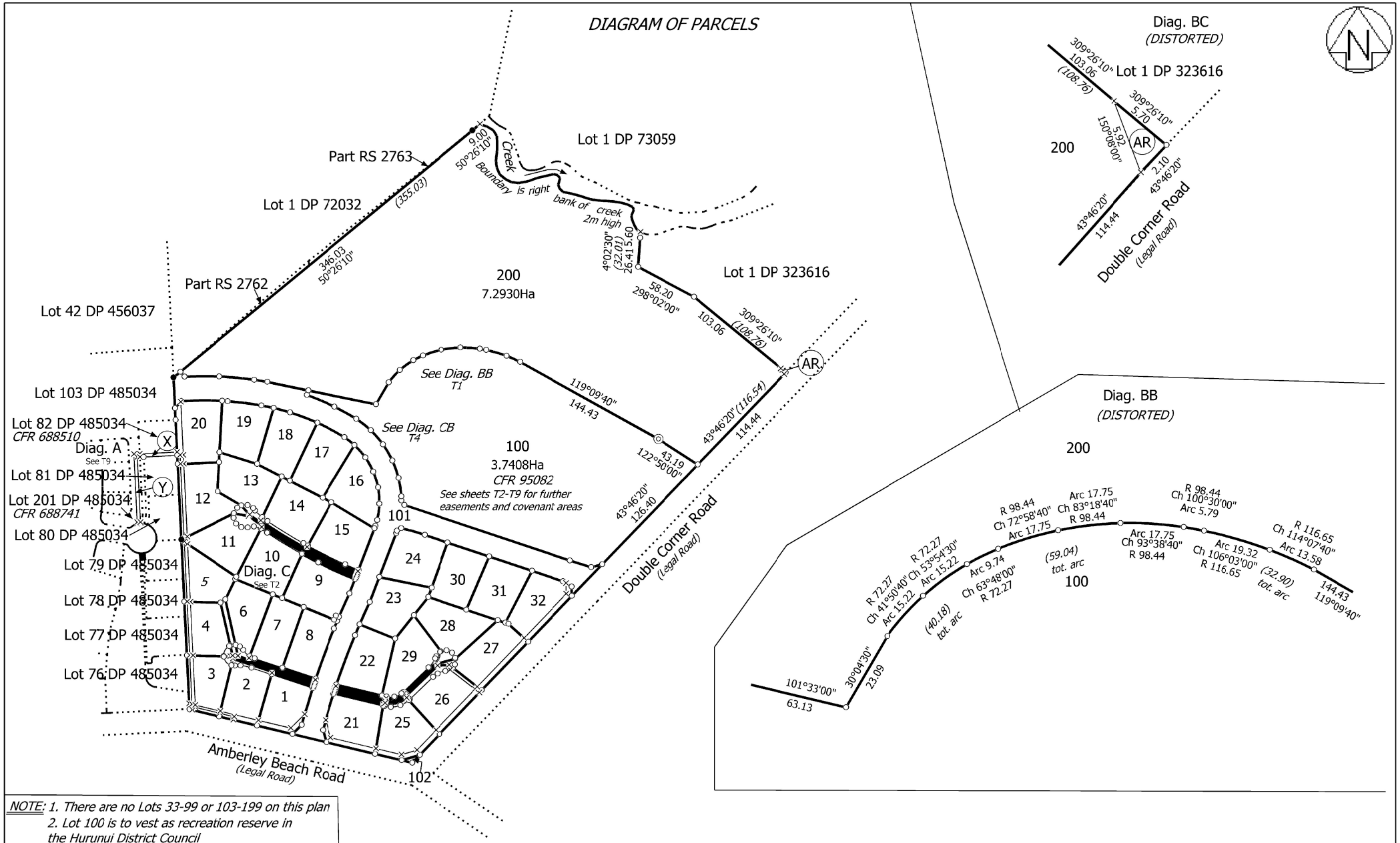

NOTE: 1. There are no Lots 33-99 or 103-199 on this plan
2. Lot 100 is to vest as recreation reserve in the Hurunui District Council
3. Lots 101 and 102 are to vest as road in the Hurunui District Council

Surveyor Ref: 11713

T 1/9

Land District: Canterbury Digitally Generated Plan Generated on: 29/02/2016 10:03am Page 12 of 20	Lots 1-32, 100-102 and 200 being a subdivision of Lot 2 DP 323616 and easements over Lots 82 and 201 DP 485034	Surveyor: Craig William Hurford Firm: Survus Contracting Ltd	Title Plan DP 488914 Deposited on: 19/02/2016



NOTE: 1. There are no Lots 33-99 or 103-199 on this plan
2. Lot 100 is to vest as recreation reserve in the Hurunui District Council
3. Lots 101 and 102 are to vest as road in the Hurunui District Council
4. Areas AF, AG, AH, AI, AJ, AK, AL, AM, AN, AO, AP and AQ are to be subject to proposed Land Covenants

Surveyor Ref: 11713

T 2/9

Land District: Canterbury Digitally Generated Plan Generated on: 29/02/2016 10:03am Page 13 of 20	Lots 1-32, 100-102 and 200 being a subdivision of Lot 2 DP 323616 and easements over Lots 82 and 201 DP 485034	Surveyor: Craig William Hurford Firm: Survus Contracting Ltd	Title Plan DP 488914 Deposited on: 19/02/2016

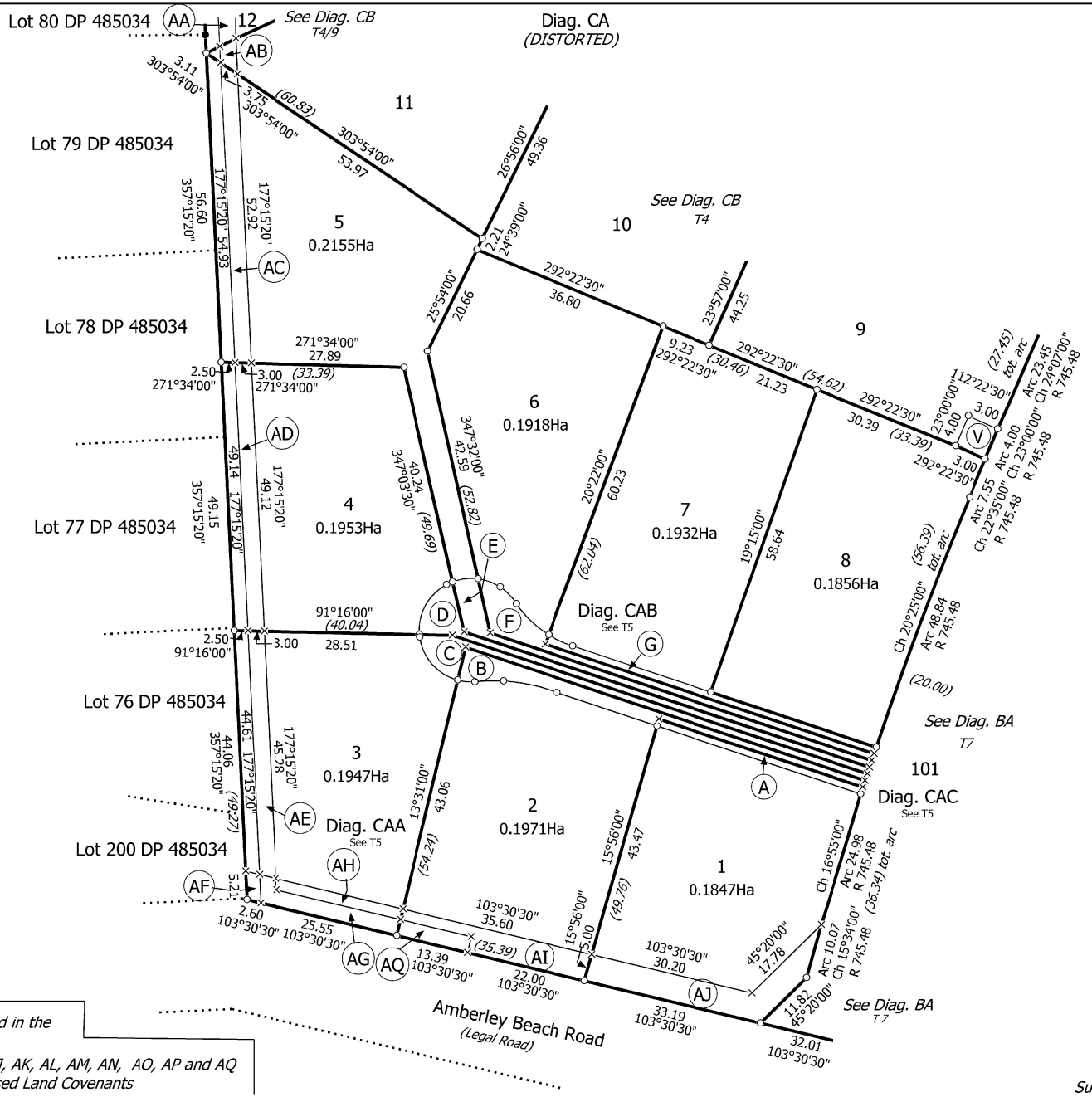

NOTE: 1. Lot 101 is to vest as road in the Hurunui District Council

2. Areas AF, AG, AH, AI, AJ, AK, AL, AM, AN, AO, AP and AQ are to be subject to proposed Land Covenants

Surveyor Ref: 11713

T 3/9

Land District: Canterbury Digitally Generated Plan Generated on: 29/02/2016 10:03am Page 14 of 20	Lots 1-32, 100-102 and 200 being a subdivision of Lot 2 DP 323616 and easements over Lots 82 and 201 DP 485034	Surveyor: Craig William Hurford Firm: Survus Contracting Ltd	Title Plan DP 488914 Deposited on: 19/02/2016

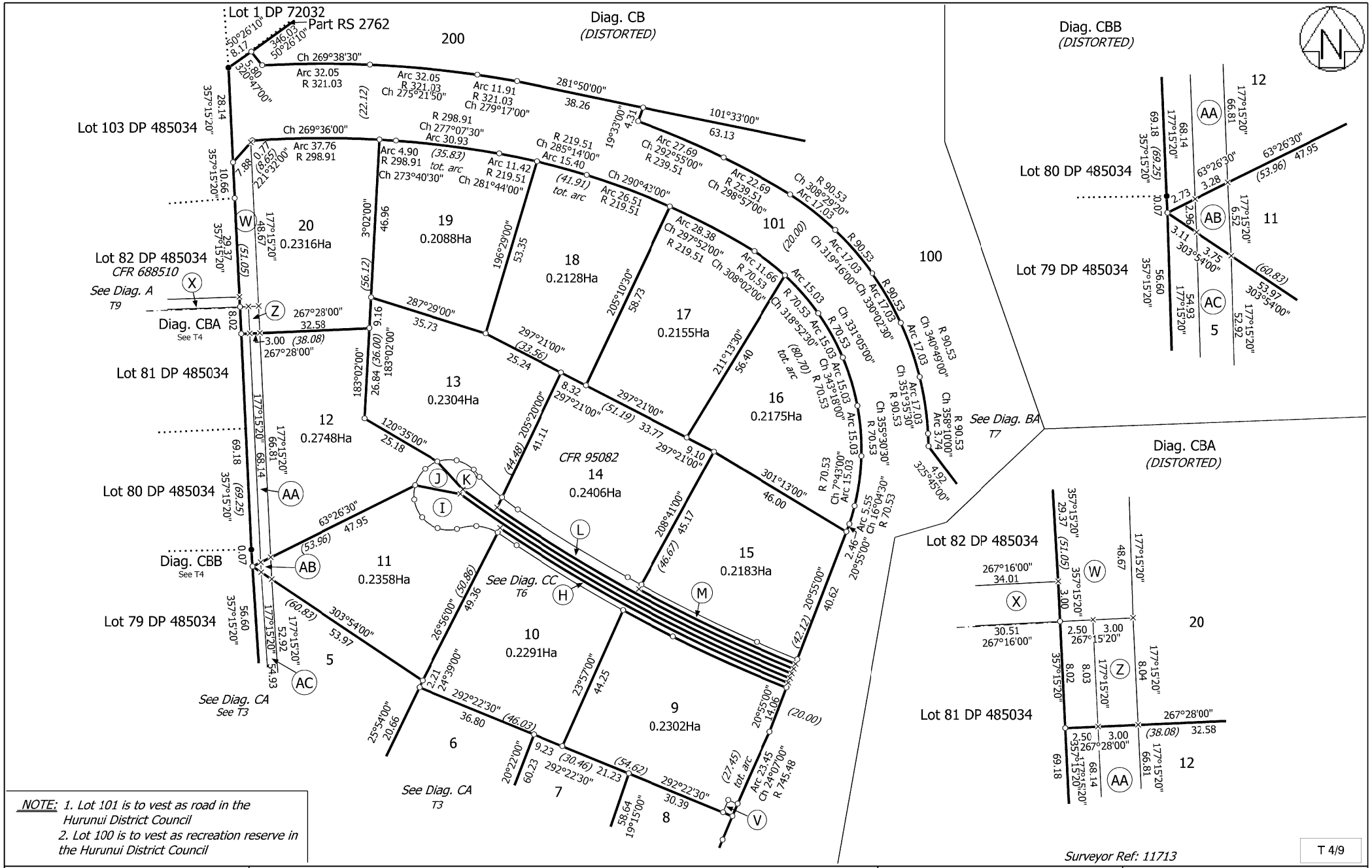

NOTE: 1. Lot 101 is to vest as road in the Hurunui District Council
2. Lot 100 is to vest as recreation reserve in the Hurunui District Council

Surveyor Ref: 11713

T 4/9

Land District: Canterbury Digitally Generated Plan Generated on: 29/02/2016 10:03am Page 15 of 20	Lots 1-32, 100-102 and 200 being a subdivision of Lot 2 DP 323616 and easements over Lots 82 and 201 DP 485034	Surveyor: Craig William Hurford Firm: Survus Contracting Ltd	Title Plan DP 488914 Deposited on: 19/02/2016

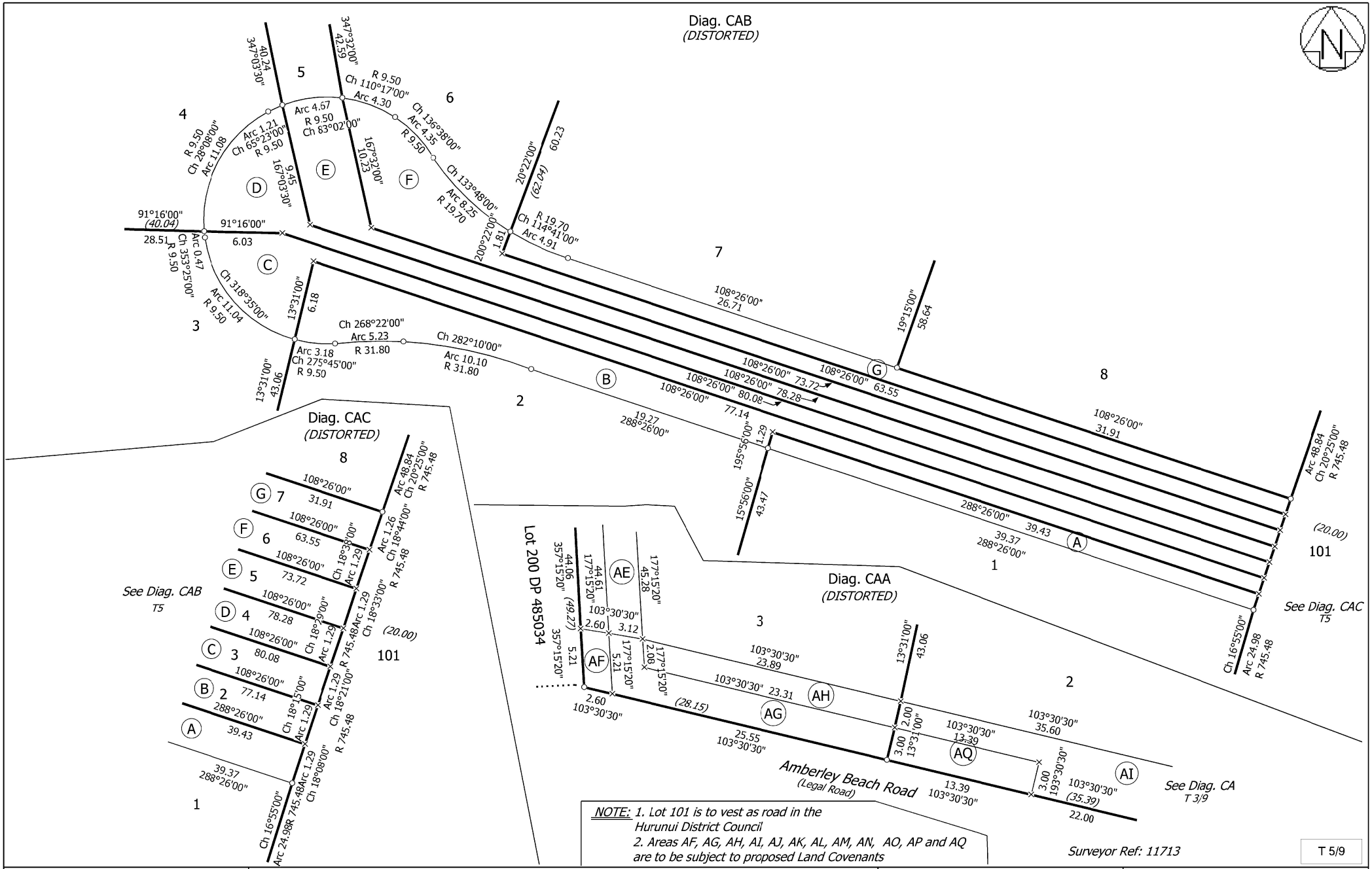

Land District: Canterbury Digitally Generated Plan Generated on: 29/02/2016 10:03am Page 16 of 20	Lots 1-32, 100-102 and 200 being a subdivision of Lot 2 DP 323616 and easements over Lots 82 and 201 DP 485034	Surveyor: Craig William Hurford Firm: Survus Contracting Ltd	Title Plan DP 488914 Deposited on: 19/02/2016

Diag. CC
(DISTORTED)

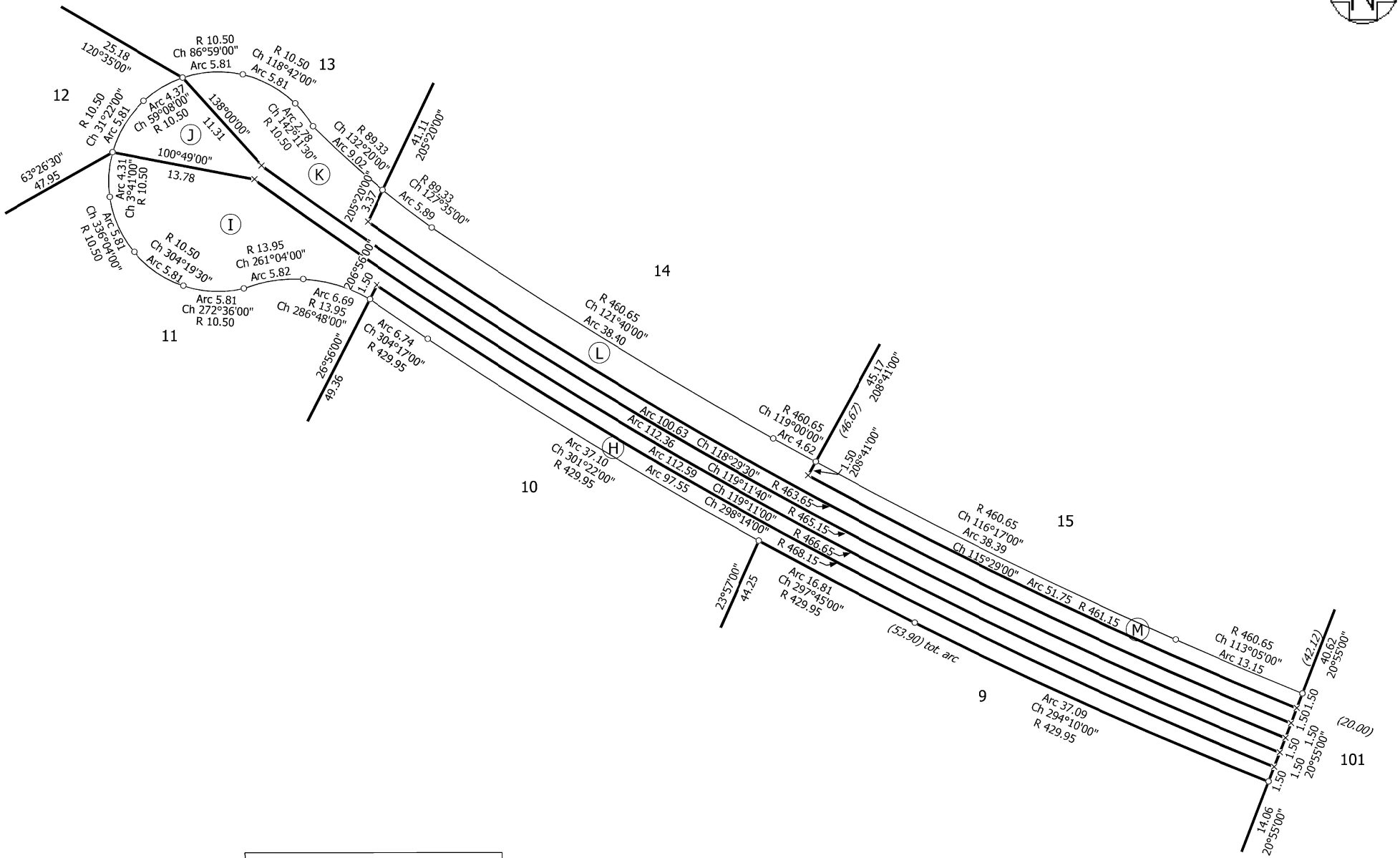

NOTE: Lot 101 is to vest as road in the Hurunui District Council

Surveyor Ref: 11713

T 6/9

Land District: Canterbury Digitally Generated Plan Generated on: 29/02/2016 10:03am Page 17 of 20	Lots 1-32, 100-102 and 200 being a subdivision of Lot 2 DP 323616 and easements over Lots 82 and 201 DP 485034	Surveyor: Craig William Hurford Firm: Survus Contracting Ltd	Title Plan DP 488914 Deposited on: 19/02/2016



NOTE: 1. Lots 101 and 102 are to vest as road in the Hurunui District Council

2. Areas AF, AG, AH, AI, AJ, AK, AL, AM, AN, AO, AP and AQ are to be subject to proposed Land Covenants

Surveyor Ref: 11713

T 7/9

Land District: Canterbury Digitally Generated Plan Generated on: 29/02/2016 10:03am Page 18 of 20	Lots 1-32, 100-102 and 200 being a subdivision of Lot 2 DP 323616 and easements over Lots 82 and 201 DP 485034	Surveyor: Craig William Hurford Firm: Survus Contracting Ltd	Title Plan DP 488914 Deposited on: 19/02/2016

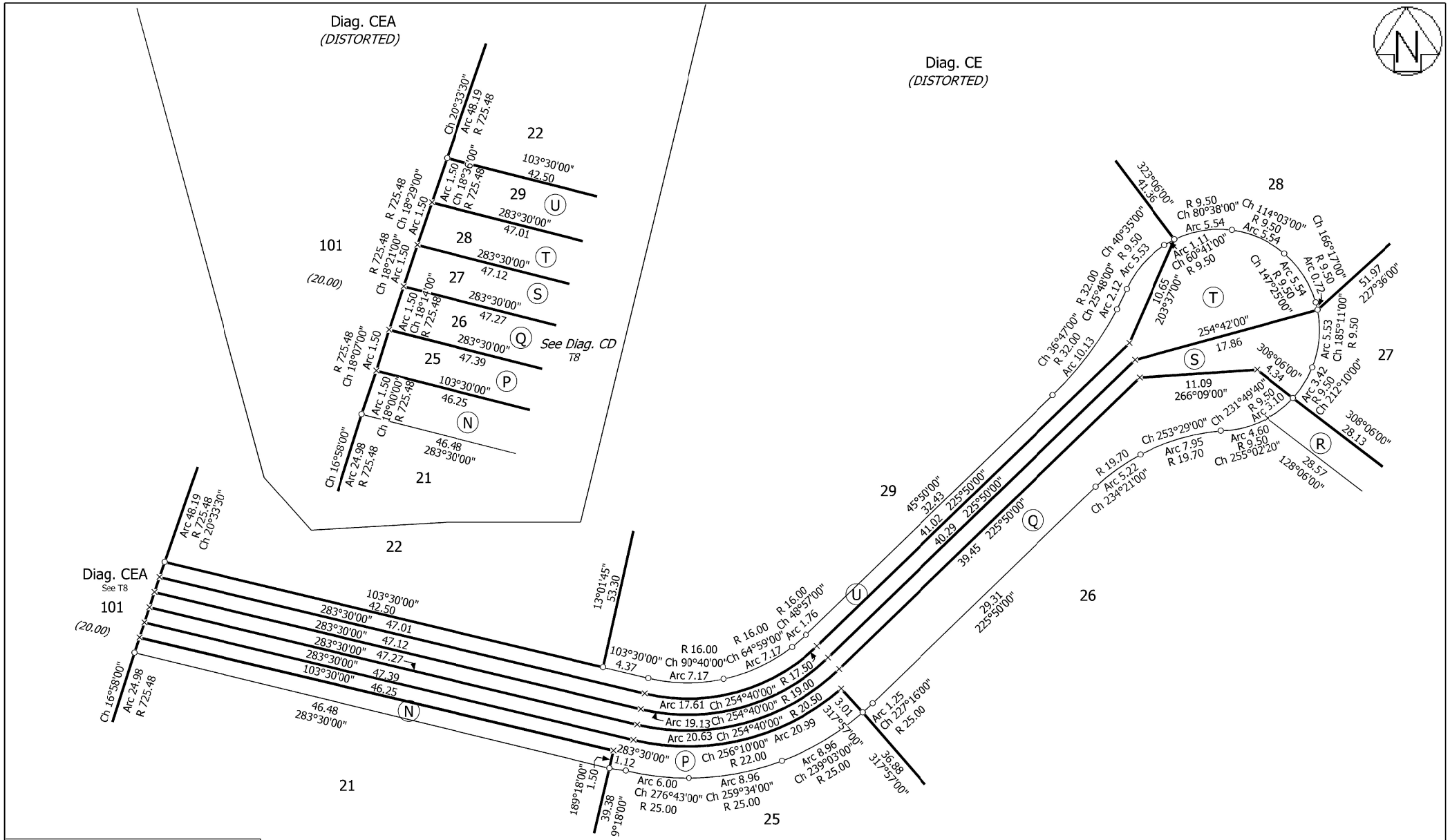

NOTE: Lot 101 is to vest as road in the Hurunui District Council

Surveyor Ref: 11713

T 8/9

Land District: Canterbury Digitally Generated Plan Generated on: 29/02/2016 10:03am Page 19 of 20	Lots 1-32, 100-102 and 200 being a subdivision of Lot 2 DP 323616 and easements over Lots 82 and 201 DP 485034	Surveyor: Craig William Hurford Firm: Survus Contracting Ltd	Title Plan DP 488914 Deposited on: 19/02/2016

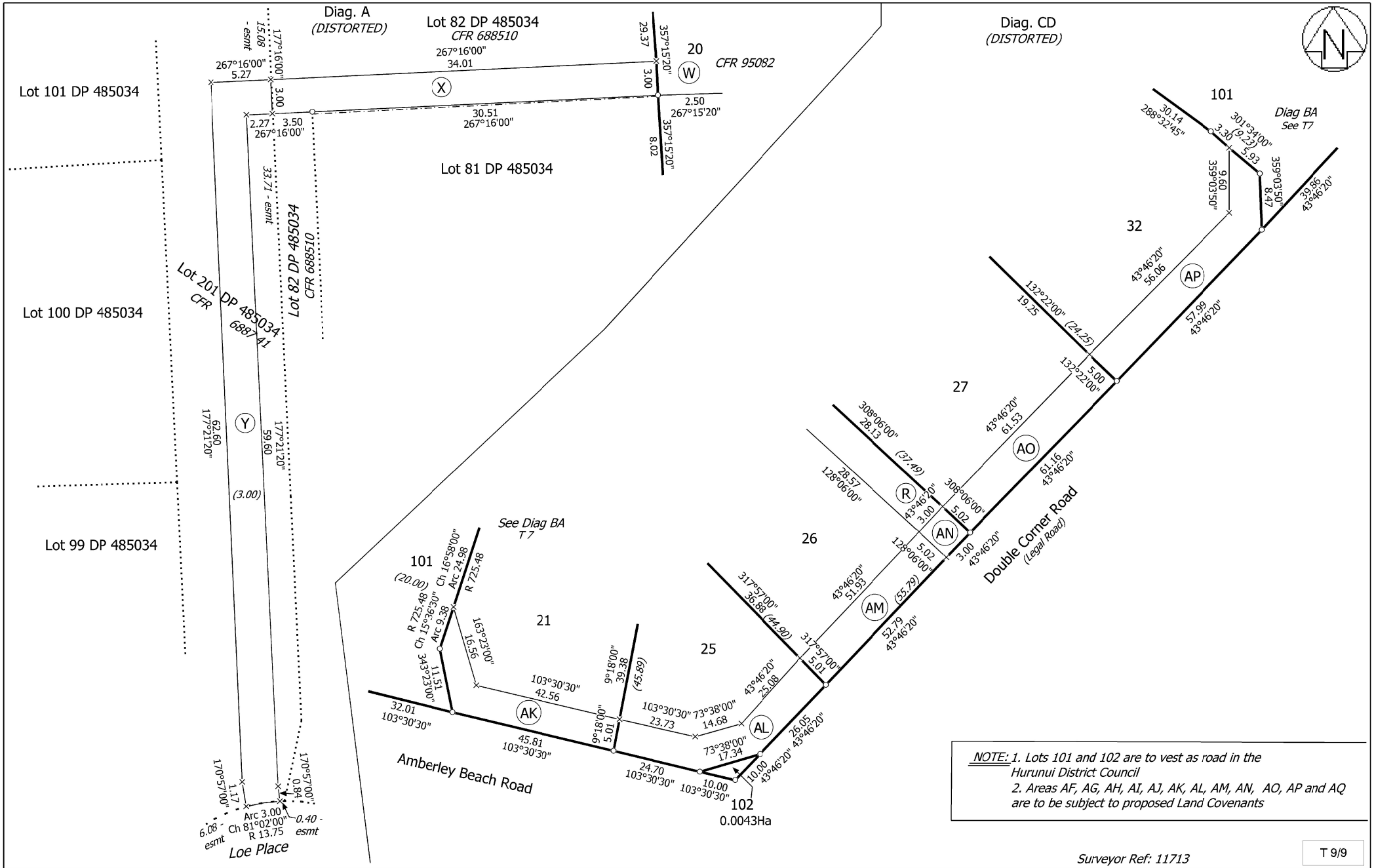

NOTE: 1. Lots 101 and 102 are to vest as road in the Hurunui District Council
2. Areas AF, AG, AH, AI, AJ, AK, AL, AM, AN, AO, AP and AQ are to be subject to proposed Land Covenants

Surveyor Ref: 11713

T 9/9

Land District: Canterbury Digitally Generated Plan Generated on: 29/02/2016 10:03am Page 20 of 20	Lots 1-32, 100-102 and 200 being a subdivision of Lot 2 DP 323616 and easements over Lots 82 and 201 DP 485034	Surveyor: Craig William Hurford Firm: Survus Contracting Ltd	Title Plan DP 488914 Deposited on: 19/02/2016

View Instrument Details

Instrument No.	10237191.4
Status	Registered
Date & Time Lodged	19 Feb 2016 09:47
Lodged By	Keenan, Dallas Elizabeth
Instrument Type	Easement Instrument

Affected Computer Registers	Land District
713202	Canterbury
713203	Canterbury
713204	Canterbury
713205	Canterbury
713206	Canterbury
713207	Canterbury
713208	Canterbury
713209	Canterbury
713210	Canterbury
713211	Canterbury
713212	Canterbury
713213	Canterbury
713214	Canterbury
713215	Canterbury
713216	Canterbury
713222	Canterbury
713223	Canterbury
713226	Canterbury
713227	Canterbury
713228	Canterbury
713229	Canterbury
713230	Canterbury

Annexure Schedule: Contains 4 Pages.

Grantor Certifications

I certify that I have the authority to act for the Grantor and that the party has the legal capacity to authorise me to lodge this instrument ☑

I certify that I have taken reasonable steps to confirm the identity of the person who gave me authority to lodge this instrument ☑

I certify that any statutory provisions specified by the Registrar for this class of instrument have been complied with or do not apply ☑

I certify that I hold evidence showing the truth of the certifications I have given and will retain that evidence for the prescribed period ☑

I certify that the Mortgagee under Mortgage 9937020.2 has consented to this transaction and I hold that consent ☑

Signature

Signed by Alana Crampton as Grantor Representative on 26/02/2016 08:33 AM

Grantee Certifications

I certify that I have the authority to act for the Grantee and that the party has the legal capacity to authorise me to lodge this instrument ☑

I certify that I have taken reasonable steps to confirm the identity of the person who gave me authority to lodge this instrument ☑

© Copyright: Land Information New Zealand

Grantee Certifications

I certify that any statutory provisions specified by the Registrar for this class of instrument have been complied with or do not apply ☑

I certify that I hold evidence showing the truth of the certifications I have given and will retain that evidence for the prescribed period ☑

Signature

Signed by Alana Crampton as Grantee Representative on 26/02/2016 08:34 AM

***** End of Report *****

Easement instrument to grant easement or *profit à prendre*, or create land covenant

(Sections 90A and 90F Land Transfer Act 1952)

Grantor

LMM INVESTMENTS 2012 LIMITED

Grantee

LMM INVESTMENTS 2012 LIMITED

Grant of Easement or *Profit à prendre* or Creation of Covenant

The Grantor being the registered proprietor of the servient tenement(s) set out in Schedule A **grants to the Grantee** (and, if so stated, in gross) the easement(s) or *profit(s) à prendre* set out in Schedule A, **or creates** the covenant(s) **set out** in Schedule A, with the rights and powers or provisions set out in the Annexure Schedule(s)

Schedule A *Continue in additional Annexure Schedule, if required*

Purpose (Nature and extent) of easement; *profit* or covenant	Shown as (plan reference)	Servient Tenement (Computer Register)	Dominant Tenement (Computer Register) or in gross
Right of way, right to drain water and sewage, right to convey water, electricity, telecommunications and computer media	A on DP 488914	713202	713203, 713204, 713205, 713206 713207 and 713208
	B on DP 488914	713203	713202, 713204, 713205, 713206, 713207 and 713208
	C on DP 488914	713204	713202, 713203, 713205, 713206, 713207 and 713208
	D on DP 488914	713205	713202, 713203, 713204, 713206, 713207 and 713208
	E on DP 488914	713206	713202, 713203, 713204, 713205, 713207 and 713208
	F on DP 488914	713207	713202, 713203, 713204, 713205, 713206 and 713208
	G on DP 488914	713208	713202, 713203, 713204, 713205, 713206 and 713207
	H on DP 488914	713211	713212, 713213, 713214, 713215 and 713216
	I on DP 488914	713212	713211, 713213, 713214, 713215 and 713216
	J on DP 488914	713213	713211, 713212, 713214, 713215 and 713216
	K on DP 488914	713214	713211, 713212, 713213, 713215 and 713216
	L on DP 488914	713215	713211, 713212, 713213, 713214 and 713216
	M on DP 488914	713216	713211, 713212, 713213, 713214 and 713215
	N on DP 488914	713222	713226, 713227, 713228, 713229 and 713230
	P on DP 488914	713226	713222, 713227, 713228, 713229 and 713230
	Q on DP 488914	713227	713222, 713226, 713228, 713229 and 713230
	S on DP 488914	713228	713222, 713226, 713227, 713229 and 713230
	T on DP 488914	713229	713222, 713226, 713227, 713228 and 713230
	U on DP 488914	713230	713222, 713226, 713227, 713228 and 713229

Easements or *profits à prendre* rights and powers (including terms, covenants and conditions)
Page 2 of 4

Purpose (Nature and extent) of easement; *profit* or covenant	Shown as (plan reference)	Servient Tenement (Computer Register)	Dominant Tenement (Computer Register) or in gross
Right to drain water	R, AN on DP 488914	713227	713222, 713226, 713228, 713229 and 713230
Right to drain water and sewage, right to convey water, electricity, telecommunications and computer media	A on DP 488914	713202	713209
	B on DP 488914	713203	
	C on DP 488914	713204	
	D on DP 488914	713205	
	E on DP 488914	713206	
	F on DP 488914	713207	
	G on DP 488914	713208	
	H on DP 488941	713211	713210
	I on DP 488914	713212	
	J on DP 488914	713213	
	K on DP 488914	713214	
	L on DP 488914	713215	
	M on DP 488914	713216	
	N on DP 488914	713222	713223
	P on DP 488914	713226	
	Q on DP 488914	713227	
	S on DP 488914	713228	
	T on DP 488914	713229	
	U on DP 488914	713230	

Easements or *profits à prendre* rights and powers (including terms, covenants and conditions)
Page 3 of 4

Delete phrases in [ ] and insert memorandum number as required; continue in additional Annexure Schedule, if required

Unless otherwise provided below, the rights and powers implied in specified classes of easement are those prescribed by the Land Transfer Regulations 2002 and/or Schedule Five of the Property Law Act 2007

The implied rights and powers are hereby **[varied]** ~~**[negatived]**~~ **[added to]** or ~~**[substituted]**~~ ~~by:~~

~~[Memorandum number , registered under section 155A of the Land Transfer Act 1952]~~

the provisions set out in Annexure Schedule

Covenant provisions

Delete phrases in [ ] and insert Memorandum number as require; continue in additional Annexure Schedule, if required

~~The provisions applying to the specified covenants are those set out in:~~

~~[Memorandum number , registered under section 155A of the Land Transfer Act 1952]~~

~~[Annexure Schedule]~~

Continue in additional Annexure Schedule, if required

The maintenance provisions of the Fourth Schedule of the Land Transfer Regulations 2002 are modified as follows:

1. The word "equally" in clause 11 (2) of the Fourth Schedule of the Land Transfer Regulations 2002 shall be read as "for a reasonable contribution in proportion to their use".

2. Any maintenance or repair on the Servient Land over the stipulated course that is necessary because of any act or omission by the Grantor must be carried out promptly by the Grantor and at the sole cost of the Grantor. Where the act or omission is the partial cause of the maintenance repair or replacement the costs payable by the Grantor responsible shall be in proportion to the amount attributable to that act or omission (with the balance payable in proportion to usage).

3. Any maintenance or repair on the Servient Land over the stipulated course that is necessary because of any act or omission by the Grantee must be carried out promptly by the Grantee and at the Grantee's sole cost. Where the act or omission is the partial cause of the maintenance repair or replacement the costs payable by the Grantee responsible must be in proportion to the amount attributable to that act or omission (with the balance payable in proportion to usage).

View Instrument Details

Instrument No.	10237191.5
Status	Registered
Date & Time Lodged	19 Feb 2016 09:47
Lodged By	Keenan, Dallas Elizabeth
Instrument Type	Easement Instrument

Affected Computer Registers	Land District
713202	Canterbury
713203	Canterbury
713204	Canterbury
713205	Canterbury
713206	Canterbury
713207	Canterbury
713208	Canterbury
713211	Canterbury
713212	Canterbury
713213	Canterbury
713214	Canterbury
713215	Canterbury
713216	Canterbury
713222	Canterbury
713226	Canterbury
713227	Canterbury
713228	Canterbury
713229	Canterbury
713230	Canterbury

Annexure Schedule: Contains 5 Pages.

Grantor Certifications

I certify that I have the authority to act for the Grantor and that the party has the legal capacity to authorise me to lodge this instrument ☑

I certify that I have taken reasonable steps to confirm the identity of the person who gave me authority to lodge this instrument ☑

I certify that any statutory provisions specified by the Registrar for this class of instrument have been complied with or do not apply ☑

I certify that I hold evidence showing the truth of the certifications I have given and will retain that evidence for the prescribed period ☑

I certify that the Mortgagee under Mortgage 9937020.2 has consented to this transaction and I hold that consent ☑

Signature

Signed by Mark John Dineen as Grantor Representative on 16/02/2016 11:31 AM

Grantee Certifications

I certify that I have the authority to act for the Grantee and that the party has the legal capacity to authorise me to lodge this instrument ☑

I certify that I have taken reasonable steps to confirm the identity of the person who gave me authority to lodge this instrument ☑

I certify that any statutory provisions specified by the Registrar for this class of instrument have been complied with or do not apply ☑

© Copyright: Land Information New Zealand

Grantee Certifications

I certify that I hold evidence showing the truth of the certifications I have given and will retain that evidence for the prescribed period ☑

Signature

Signed by Mark John Dineen as Grantee Representative on 16/02/2016 11:31 AM

***** End of Report *****

Easement instrument to grant easement or *profit à prendre*, or create land covenant

Sections 90A and 90F, Land Transfer Act 1952

Grantor *Surname(s) must be underlined.*

LMM INVESTMENTS 2012 LIMITED

Grantee *Surname(s) must be underlined.*

CHORUS NEW ZEALAND LIMITED

Grant of easement or *profit à prendre* or creation of covenant

The Grantor, being the registered proprietor of the servient tenement(s) set out in Schedule A, **grants to the Grantee** (and, if so stated, in gross) the easement(s) or *profit(s) à prendre* set out in Schedule A, **or creates** the covenant(s) set out in Schedule A, with the rights and powers or provisions set out in the Annexure Schedule(s).

Schedule A *Continue in additional Annexure Schedule if required.*

Purpose (nature and extent) of easement, *profit(s) à prendre*, or covenant	Shown (plan reference)	Servient tenement (Identifier/CT)	Dominant tenement (Identifier/CT *or* in gross)
Right to convey telecommunications and computer media	A, B, C, D, E, F, G, H, I, J, K, L, M, N, P, Q, S, T and U on DP 488914	Lots 1- 7 DP 488914 CFR 713202-713208 Lots 10 – 15 DP 488914 CFR713211 – 713216 Lots 21, 25 – 29 DP 488914 CFR 713222, 713226 – 713230	**Chorus New Zealand Limited (in gross)**

Easements or *profits à prendre* rights and powers (including terms, covenants, and conditions) *Delete phrases in [ ] and insert memorandum number as required. Continue in additional Annexure Schedule if required.*

Unless otherwise provided below, the rights and powers implied in specific classes of easement are those prescribed by the Land Transfer Regulations 2002 and/or the Fifth Schedule of the Property Law Act 2007.

The implied rights and powers are **varied~~/negatived/added to or substituted~~** by:

~~Memorandum number , registered under section 155A of the Land Transfer Act 1952.~~

The provisions set out in the Annexure Schedule.

Delete phrases in [ ] and insert memorandum number as required.

Covenant provisions *Continue in additional Annexure Schedule if required.*

~~The provisions applying to the specified covenants are those set out in:~~

~~Memorandum number , registered under section 155A of the Land Transfer Act 1952.~~

~~Annexure Schedule 2.~~

Annexure Schedule

Insert type of instrument

Easement	Dated		Page	2	of		Pages

Continue in additional Annexure Schedule, if required.

Continuation of "Easement rights and powers":

1 The rights and powers in this easement are in addition to those rights and powers contained in Schedule 4 to the Land Transfer Regulations 2002 ("the Fourth Schedule") and where the terms of this easement are in conflict with either the Fourth Schedule or any of the statutory rights and authorities which the Grantee may have in respect of the Servient Tenement, the terms of this easement shall prevail.

2 **Grant of Easement**

2.1 In addition to the above rights and powers the Grantor grants to the Grantee as an easement in gross the following rights and powers at all times and in any quantity:

(a) to lay, install (including construct), locate, upgrade, add to, inspect, maintain, replace, repair, renew, enlarge, alter, retain, remove any Lines and Works on, in, over and under the Easement Land;

(b) subject to clauses 4.1 and 4.2, to enter with all necessary equipment and remain upon the Servient Tenement for the purposes of laying, installing (including constructing), locating, upgrading, adding to, inspecting, maintaining, replacing, repairing, renewing, enlarging, altering, retaining or removing Lines or Works and make any accessways, cuttings, fillings, grades, batters and to re-open the same and generally to do and perform such acts or things upon the Servient Tenement as may be necessary or desirable (or incidental thereto) to enable the Grantee to receive, enjoy and give effect to the full free use and enjoyment of the rights and powers granted under this easement; and

(c) to use and operate Lines and Works (such use and operation may include the granting of such use to third party telecommunications service providers) for the purpose of conveying telecommunications and computer media without interruption or impediment,

provided however that nothing shall compel the Grantee to exercise the above rights at any time or in a particular way.

3 **Grantee's Covenants**

3.1 The Grantee shall be responsible for:

(a) the installation of and maintenance of the Lines and Works located on the Easement Land; and

(b) using its best endeavors to prevent the Lines and Works located on the Easement Land becoming a danger to any user or occupier of the Servient Tenement.

3.2 The Grantee will, in exercising the rights granted to the Grantee under this easement cause as little damage as reasonably possible to the Servient Tenement and to any building or building improvement (including, without limitation, any interior fitout) located on the Servient Tenement.

Annexure Schedule

Insert type of instrument

Easement	Dated		Page	3	of		Pages

Continue in additional Annexure Schedule, if required.

3.3 The Grantee will at the Grantee's own cost repair and make good any damage to the Servient Tenement (including without limitation any damage to any building(s), fences or other improvements) caused by the Grantee in exercising the Grantee's rights and powers under this easement as reasonably close as possible to the original condition of the Servient Tenement prior to such damage and to the reasonable satisfaction of the Grantor.

4 **Access**

4.1 The Grantee may, at any time (but subject to clause 4.2) from time to time enter the Servient Tenement (including, for the avoidance of doubt, any areas of Common Property on the Servient Tenement) using such routes as prescribed by the Grantor (acting reasonably) and with or without its employees, contractors and agents and with or without vehicles, machinery and implements of any kind for purposes associated with the creation and exercise of its rights and powers under this easement. If relevant, the Grantor shall invoke its rights pursuant to section 80 of the Unit Titles Act 2010 (or procure that such rights are invoked) as may be necessary to allow the Grantee access to its Lines and Works as agent of the body corporate.

4.2 In exercising the rights granted to the Grantee under this easement, the Grantee shall use reasonable efforts to give the Grantor prior notice that the Grantee intends to enter upon the Servient Tenement (except in the case of an Emergency, when notice will not be required). Without limitation to the preceding provisions, the Grantor shall not at any time restrict or impede access to the Easement Land (including by way of subdivision of the Land) by the Grantee and, upon request by Grantee, will provide the Grantee with all necessary keys and / or access cards required from time to time to gain access to the Servient Tenement and the Easement Land.

5 **Grantor's Covenants**

5.1 The Grantor will not without the written permission of the Grantee (not to be unreasonably withheld or delayed):

(a) grow or permit to be grown any natural or cultivated vegetation (including trees and shrubs) on or in the near vicinity, or encroaching on the Easement Land. The Grantee may at all times at the Grantor's cost remove any natural or cultivated vegetation or improvement on the Easement Land which may interfere with the rights granted by this easement; or

(b) erect or permit to be erected any improvement (including but not limited to buildings, sheds, fences, roads, walls or driveways) on the Easement Land; or

(c) do anything on the Easement Land that may damage or endanger the Grantee's Lines or Works; or

(d) do any act which will interfere with the rights granted by this easement and will not at any time do permit or suffer any act whereby the full and free use and enjoyment by the Grantee of the rights and privileges granted by this are interfered with.

Annexure Schedule

Insert type of instrument

Easement	Dated		Page	4	of		Pages

Continue in additional Annexure Schedule, if required.

6 **Removal**

6.1 The Lines and Works are and shall remain the sole property of the Grantee and the Grantee shall not be required to remove the Lines and/or Works at any time. No person shall have any interest in such Lines and Works by reason only of having an interest or estate in the Servient Tenement.

6.2 No power is implied for the Grantor to determine this easement for any breach of covenant or for any other cause whatsoever. The parties intend this easement to subsist forever or until it is duly surrendered or extinguished at the election of the Grantee.

7 **Further Assurances**

7.1 Each party shall make all applications, including executing and delivering any documents, and doing all acts and things, as may reasonably be required by the other party to obtain the full benefit of this easement according to its true intent.

8 **Telecommunications Act 2001 and End User Terms**

8.1 Notwithstanding anything to the contrary in this easement, the terms contained in this easement shall be without prejudice to, and do not reduce or limit, the rights and powers of the Grantee under the Telecommunications Act 2001 or any other document or arrangement conferring rights or powers on the Grantee in relation to Lines and Works at the Servient Tenement, and the Grantee may, in its discretion, rely on or exercise any of its rights and powers, whether in addition to or instead of the rights and powers granted by this easement.

9 **Definitions and interpretation**

9.1 In this easement:

(a) "**Common Property**" has the same meaning ascribed to that term under the Unit Titles Act 2010.

(b) "**Easement Land**" means that part of the Servient Tenement identified in Schedule A in this easement as Easement Land and those other parts of the Servient Tenement (including buildings) on which the Grantee has installed and located its Lines and Works.

(c) "**Emergency**" means a situation in which there is a probable danger to life or property or immediate risk to the continuity or safety of supply of telecommunications.

(d) "**Grantee**" means Chorus New Zealand Limited and includes all its subsidiaries (within the meaning of Sections 5 and 6 of the Companies Act 1993) and its successors, assigns, personal representatives, employees, contractors, agents, licensees and invitees.

(e) "**Grantor**" includes the successors in title, assigns, tenants, transferees and personal representatives of the Grantor.

Annexure Schedule

Insert type of instrument

Easement	Dated		Page	5	of		Pages

Continue in additional Annexure Schedule, if required.

(f) "**Line**" and "**Works**" shall have the meanings ascribed to those terms under the Telecommunications Act 2001;

View Instrument Details

Instrument No.	10237191.6
Status	Registered
Date & Time Lodged	19 Feb 2016 09:47
Lodged By	Keenan, Dallas Elizabeth
Instrument Type	Easement Instrument

Affected Computer Registers	Land District
713202	Canterbury
713203	Canterbury
713204	Canterbury
713205	Canterbury
713206	Canterbury
713207	Canterbury
713208	Canterbury
713210	Canterbury
713211	Canterbury
713212	Canterbury
713213	Canterbury
713214	Canterbury
713215	Canterbury
713216	Canterbury
713222	Canterbury
713226	Canterbury
713227	Canterbury
713228	Canterbury
713229	Canterbury
713230	Canterbury

Annexure Schedule: Contains 9 Pages.

Grantor Certifications

I certify that I have the authority to act for the Grantor and that the party has the legal capacity to authorise me to lodge this instrument ☑

I certify that I have taken reasonable steps to confirm the identity of the person who gave me authority to lodge this instrument ☑

I certify that any statutory provisions specified by the Registrar for this class of instrument have been complied with or do not apply ☑

I certify that I hold evidence showing the truth of the certifications I have given and will retain that evidence for the prescribed period ☑

I certify that the Mortgagee under Mortgage 9937020.2 has consented to this transaction and I hold that consent ☑

Signature

Signed by Joanna Alison Turnbull as Grantor Representative on 19/02/2016 09:04 AM

Grantee Certifications

I certify that I have the authority to act for the Grantee and that the party has the legal capacity to authorise me to lodge this instrument ☑

I certify that I have taken reasonable steps to confirm the identity of the person who gave me authority to lodge this instrument ☑

I certify that any statutory provisions specified by the Registrar for this class of instrument have been complied with or do not apply ☑

© Copyright: Land Information New Zealand

Grantee Certifications

I certify that I hold evidence showing the truth of the certifications I have given and will retain that evidence for the prescribed period ☑

Signature

Signed by Craig William Knowles as Grantee Representative on 18/02/2016 02:45 PM

***** End of Report *****

© Copyright: Land Information New Zealand

Easement instrument to grant easement or *profit à prendre*, or create land covenant

(Sections 90A and 90F Land Transfer Act 1952)

Grantor

LMM Investments 2012 Limited

Grantee

MainPower New Zealand Limited

Grant of Easement or *Profit à prendre* or Creation of Covenant

The Grantor being the registered proprietor of the servient tenement(s) set out in Schedule A **grants to the Grantee** (and, if so stated, in gross) the easement(s) or *profit(s) à prendre* set out in Schedule A, **or creates** the covenant(s) **set out** in Schedule A, with the rights and powers or provisions set out in the Annexure Schedule(s)

Schedule A *Continue in additional Annexure Schedule, if required*

Purpose (Nature and extent) of easement; *profit* or covenant	Shown (plan reference)	Servient Tenement (Computer Register)	Dominant Tenement (Computer Register) or in gross
Right to convey electricity in gross	A on DP 488914	Lot 1 DP 488914 CFR 713202	Easement in gross in favour of MainPower New Zealand Limited
	B on DP 488914	Lot 2 DP 488914 CFR 713203	
	C on DP 488914	Lot 3 DP 488914 CFR 713204	
	D on DP 488914	Lot 4 DP 488914 CFR 713205	
	E on DP 488914	Lot 5 DP 488914 CFR 713206	
	F on DP 488914	Lot 6 DP 488914 CFR 13207	
	G on DP 488914	Lot 7 DP 488914 CFR 713208	
	H on DP 488914	Lot 10 DP 488914 CFR 713211	
	I on DP 488914	Lot 11 DP 488914 CFR 713212	

Right to convey electricity in gross	J on DP 488914	Lot 12 DP 488914 CFR 713213	Easement in gross in favour of MainPower New Zealand Limited
	K on DP 488914	Lot 13 DP 488914 CFR 713214	
	L on DP 488914	Lot 14 DP 488914 CFR 713215	
	M on DP 488914	Lot 15 DP 488914 CFR 713216	
	N on DP 488914	Lot 21 DP 488914 CFR 713222	
	P on DP 488914	Lot 25 DP 488914 CFR 713226	
	Q on DP 488914	Lot 26 DP 488914 CFR 713227	
	S on DP 488914	Lot 27 DP 488914 CFR 713228	
	T on DP 488914	Lot 28 DP 488914 CFR 713229	
	U on DP 488914	Lot 29 DP 488914 CFR 713230	
	V on DP 488914	Lot 9 DP 488914 CFR 713210	

- continued

Easements or *profits à prendre* rights and powers (including terms, covenants and conditions)

Delete phrases in [ ] and insert memorandum number as required; continue in additional Annexure Schedule, if required

Unless otherwise provided below, the rights and powers implied in specified classes of easement are those prescribed by the Land Transfer Regulations 2002 ~~and/or Schedule Five of the Property Law Act 2007~~

The implied rights and powers are hereby ~~[varied] [negatived] [added to]~~ or **[substituted]** by:

~~[Memorandum number , registered under section 155A of the Land Transfer Act 1952]~~

[the provisions set out in the Annexure Schedule]

Covenant provisions

Delete phrases in [ ] and insert Memorandum number as require; continue in additional Annexure Schedule, if required

The provisions applying to the specified covenants are those set out in:

~~[Memorandum number , registered under section 155A of the Land Transfer Act 1952]~~

[Annexure Schedule]

ANNEXURE SCHEDULE

1. Definitions and Interpretation

"Construct"	includes construct, lay, renew, upgrade, replace, change the size of and remove and Construction has a similar meaning.
"Distribution Line"	means a wire or wires or a conductor of any other kind (including a fibre optic or coaxial cable) used or intended to be used for the distribution or transmission of electricity and/or telecommunication signals, waves or impulses. It further means insulators, foundation, casing tube, tunnel, underground cable, fuses, fuse holder, voltage regulators, fixture or other item, equipment or material used or intended to be used for supporting, securing and enclosing, surrounding or protecting a Distribution Line or facilitating the transmission of electricity and telecommunication signals, waives or impulses through a Distribution Line.
"Easement Strip"	means the land defined in Schedule A.
"Equipment"	includes equipment, plant, tools, cables, lines, wires and all materials and items required for the purposes of carrying out any of the rights given in this easement instrument.
"Grantee"	means the Grantee and includes its successors and assigns.
"Grantor"	includes the Grantor's executors, administrators, successors and assigns.
"Kiosk"	means any structure or building, including a remote transformer (if required) used or intended to be used for any purpose necessary or incidental to the distribution of electricity and/or telecommunication, signal waves or impulses and includes any foundation, minor fixture or other item, equipment or material used or intended to be used for supporting, securing, enclosing, surrounding and protecting a kiosk; and also includes any instruments, apparatus and device used in association with a kiosk for the purposes of protecting and facilitating the distribution of electricity and telecommunications signals waves or impulses to, through or from the kiosk.
"Land"	means the servient tenement in Schedule A
"Land Code"	means the Land Code of Practice which forms part of of the Constitution for the Electricity and Gas Complaints Commissioners Scheme as amended or substituted from time to time by the Council for that Scheme.
"Maintain"	includes repair, renew, alter, inspect and improve and Maintenance has a similar meaning.
"Operate"	means the sending, passing, receiving, conducting, distributing, transmitting and transporting of electricity and all associated signals, waves or impulses and Operation has a similar meaning.
"Persons Under the Control of the Grantee"	include any workmen, contractors, professional advisers or other employees authorised by the Grantee.
"Telecommunication"	has the meaning defined in the Telecommunications Act 2001.

"Vegetation"	includes all vegetation both cultivated and natural and includes crops, trees and shrubs but excludes grass.
"Vehicles"	includes trucks, tractors, excavators, cranes and aircraft.

1.2 Interpretation

Unless a contrary intention appears;

a. words referring to the singular number include the plural number and the reverse.

b. Any reference to any of the parties by their defined terms includes that parties' executors, administrators or permitted assigns or both or being a company its successors or permitted assigns, or both.

c. Every agreement or undertaking expressed or implied by which more persons than one agree or undertake any obligation or derive any benefit binds and is for the benefit of such persons jointly and severally.

d. Clause headings are for reference purposes only.

e. Where any words or phrases are given a defined meaning any other part or speech or other grammatical form in respect of such word or phrase has a corresponding meaning.

f. A reference to an exhibit, annexure or schedule is a reference to the corresponding exhibit, annexure or schedule.

g. A reference to a statute includes all regulations under and amendments to that statute on the date the easement has been signed by both parties.

2. GRANT OF RIGHTS POWERS AND PRIVILEGES

2.1 The Grantor hereby grants to the Grantee an easement in gross in perpetuity the right to convey electricity and associated Telecommunication on, in, under and through the Grantee's Easement Strip together with and subject to the following rights, powers and covenants for the Persons Under the Control of the Grantee:

(a) **Right to Enter for Construction**

The right to enter onto the land to Survey and Construct the Distribution Line and Kiosk together with any Equipment or Vehicles associated with such Survey and Construction. In exercise of the rights hereby granted the Grantee will not unduly interfere with any other lawful user of the Land and will, except in case of emergency, give reasonable notice to the Grantor of the Grantee's intention to carry out works authorised hereby.

The Grantee shall have the right to:

(i) Construct a Distribution Line in, under and through that part of the Land marked A, B, C, D, E, F, G, H, I, J, K, L, M, N, P, Q, S, T, U and V on DP 488914 with an operating voltage of no more than 24kV; and

(ii) Construct a Kiosk on that part of the land marked V on DP 488914 with a maximum transformer capacity of 1.5 MVA.

The maximum allowable height of the Kiosk is 2 metres. The Grantor grants the Grantee the right to maintain, upgrade (to the limits defined in this clause), renew or remove the Distribution Line and/or Kiosk.

(b) **Right to Lay Cable**

The right to lay cable for the purpose of electricity distribution under the Easement Strip. The Grantee may dig up and excavate the Easement Strip for the purposes set out in this easement instrument, and if necessary may deposit soil upon the Land provided that all work shall be carried out expeditiously and on completion the surface of any land affected will forthwith be restored as nearly as possible to its former state and condition at the cost of the Grantee.

(c) **Right to Remove Vegetation**

The right to keep the Easement Strip clear of any Vegetation or structures which are, or are likely, in the reasonable opinion of the Grantee a danger or a hazard to the safety or the operation of the Distribution Line or Kiosk. Removal of Vegetation planted subsequent to the date of the Agreement shall be at the expense of the Grantor. Provided however that the Grantee will consult with the Grantor as to the extent of any removal or pruning of any Vegetation on the Easement Strip.

(d) **Right to enter to Maintain and Operate Distribution Line and Kiosk**

The right to enter on the Easement Strip, with or without Equipment or Vehicles for any purposes associated with the Maintenance and Operation of the Distribution Line and Kiosk but subject to the condition that as little disturbance as is reasonably possible is caused to the Easement Strip.

(e) **Right to Erect Notices**

The right to erect on the Easement Strip signs and notices giving warning of danger.

(f) **Right to Take Safety Measures**

The right to take such measures as the Grantee reasonably thinks necessary for the safety of persons and property. Except in the case of emergencies the Grantee shall be required to first obtain the consent of the Grantor to take any such measures.

(g) **Right to Access**

The right to have access to the Easement Strip through any land of the Grantor adjacent to it for the purposes of survey, Construction, Maintenance and Operation of the Distribution Line, and/or Kiosk including exercising any of the powers granted in this Easement Instrument at any time and with and without Vehicles, plant and Equipment provided that;

(i) except in case of emergency no such right shall be exercised without the consent of the Grantor which consent shall not be unreasonably withheld;

(ii) the Grantee will leave gates as they are found;

(iii) the Grantee will drive in a safe manner and take reasonable steps not to disturb stock; and

(iv) such rights shall be exercised in such manner as will minimise damage to The Land and disturbance to any occupier.

3. GRANTOR'S USE OF EASEMENT LAND

3.1 The Grantor may use the Easement Strip provided it does not interfere with the rights of the Grantee in this Easement Instrument.

4. OBLIGATIONS OF THE GRANTEE

4.1 Maintenance

The Grantee will Maintain the Distribution Line in good repair and will prevent the same from becoming a nuisance.

4.2 Disturbance

The Grantee will carry out works permitted by this Easement Instrument as expeditiously as possible and with as little disturbance to the surface of the Easement Strip as possible.

4.3 Reinstatement

The Grantee will reinstate any underground pipes, cables or other service conduits of the Grantor or any third party having the right to lay, use or Maintain them on any part of the Land which are damaged by the Construction, Maintenance or Operation by the Grantee of any work.

4.4 Reinstatement of Grantor's Land

The Grantee will reinstate the Land as soon as practicable to a condition equivalent as far as reasonable and practicable to that which existed before Construction as a result of anything done by the Grantee.

4.5 Obligations of the Grantee

The Grantee will comply with the provisions of all statutes, ordinances, regulations and by-laws issued made or given by any competent authority in any way relating to its use of the Easement Strip.

4.6 Indemnity

4.6.1 The Grantee indemnifies the Grantor against any loss or physical damage to the Land or anything located on the Land and any loss or damage suffered to a third party for which a claim is brought against the Grantor where that damage is caused by any act or omission of the Grantee not permitted by this Easement Instrument or any negligent act or omission of the Grantee.

4.6.2. The Grantor indemnifies the Grantee against any physical damage to the works permitted by this Easement Instrument or Equipment and any other property of the Grantee and any damage to a third party for which a claim is brought against the Grantee where that damage is caused by any act or omission of the Grantor undertaken wilfully or with wilful disregard and not permitted by this Easement Instrument or any negligent act or omission of the Grantor.

5. Restrictions on the Grantee's Further Use

5.1 Interference

In exercising its rights the Grantee will not unreasonably interfere with the ordinary use of the Land and will cause as little damage as is reasonably possible to the surface of the Land.

5.2 Safety

The Grantee will Operate and Maintain the Distribution Line and Kiosk in a safe manner and any Equipment shall be left in as safe a condition as is practicable.

5.3 After initial Construction of the Distribution Line and Kiosk the Grantee may upgrade capacity provided voltage does not exceed the limits defined in clause 2.1(a) of this Easement.

6. **Ownership**

6.1 Any Equipment installed under or Kiosk installed on the Easement Strip shall be the property of the Grantee and may be removed by it but any damage thereby caused shall immediately be remedied by the Grantee at its own cost.

6.2 **No Interest**

Neither the Grantor nor any mortgagee or chargeholder of the Grantor shall have any interest in Equipment or Kiosk owned by the Grantee.

6.3 **Disclaimer**

The Grantor acknowledges that the distribution line and /or kiosk remain the property of the Grantee notwithstanding they are affixed to the land.

7. **Restrictions on the Grantor**

7.1 The Grantor will not do anything whereby the rights granted to the Grantee may be interfered with or affected in any way and in particular the Grantor will not without the consent in writing of the Grantee:

a. Erect or permit the erection of structures on the Easement Strip.

b. Erect any fence on the Easement Strip.

c. Disturb the soil below a depth of 0.3 metres on the Easement Strip.

d. Carry out any cultivation or permit any growth of Vegetation on the Land which:

i. either overhangs or transgresses the Easement Strip or encroaches the minimum setback requirements in the Electricity (Hazards from Trees) Regulations 2003 (or any other statutory regulation that amends, consolidates or replaces it);

ii. Endangers or causes a nuisance to the Grantee's operation or Persons Under the Control of the Grantee; or

iii. Transgresses any statutory regulation relating to the Distribution Line or Kiosk.

e. Allow to be lit any fires or burn off Vegetation within the Easement Strip.

f. Do anything on the Easement Strip which could damage the Distribution Line or Kiosk including allowing the construction of additional services within that Easement Strip.

g. Disturb any survey pegs or markers placed on the Easement Strip by the Grantee.

h. Develop or use the Land in a way which would prevent the Grantee from exercising its rights.

i. Impede the Grantee's access over the Land and the Easement Strip.

j. Knowingly cause or permit flooding of the Easement Strip.

k. Alter or permit to be altered the existing ground level within the Easement Strip.

7.2 If the Grantor consents to or causes or permits any breach of the obligations in this Easement Instrument, the Grantee shall be entitled to take all reasonable steps to

abate or remedy the particular breach including, but not limited to, the trimming or renewal of Vegetation, the removal or reduction of structures, fences or stockpiles and any other steps necessary for the protection of the Distribution Line on the Easement Strip and in the absence of negligence or recklessness, the Grantee shall not be liable to the Grantor, whether in contract, tort or otherwise, for any loss, compensation, damage or expenses incurred or suffered by the Grantor.

8. **Assignment**

8.1 The Grantee may transfer, lease, assign or licence (a "Disposition") all or any part of its estate or interest in the Easement Strip and/or the rights in this Easement Instrument or any parts of those rights without the consent of the Grantor, but subject to the rights and obligations set out in this Easement Instrument provided that any Disposition is accompanied by a Disposition of the Distribution Line.

9. **No Restriction**

Nothing contained in this Easement Instrument or implied shall be deemed to abrogate, limit, restrict or abridge any of the rights, powers and remedies vested in the Grantee by any Statute.

10. **Further Assurance**

10.1 Each party shall at the request of the other party execute and deliver any further documents or assurances and all acts and things reasonably required by the other party to give full force and effect to this Easement Instrument.

11. **Non Merger**

11.1 None of the Grantor's obligations or warranties will be merged or become of no effect upon registration of this easement instrument, but will remain binding upon the parties and their respective successors and assigns.

12. **Governing law**

12.1 This Easement is governed by and construed in accordance with the laws of New Zealand. Nothing in this Easement Instrument shall be deemed to limit any of the rights, powers and remedies vested in the Grantee by statute.

13. **Disputes**

13.1 Any dispute between the parties to this Easement which touches the construction meaning or effect of this Easement or the rights or liabilities of the parties to this Easement shall unless otherwise specifically agreed in writing between the parties be referred to arbitration conducted in accordance with the provisions of the Arbitration Act 1996 of New Zealand or any statutory modification or re-enactment of that Act which may at the time of the dispute be in force.

14. **Land Code**

14.1 Except to the extent specific provisions of the Land Code are stated not to apply and except as required by law the Grantee will observe and comply with the undertakings, principles and obligations and follow the complaints process in the Land Code.

View Instrument Details

Instrument No.	10237191.7
Status	Registered
Date & Time Lodged	19 Feb 2016 09:47
Lodged By	Keenan, Dallas Elizabeth
Instrument Type	Easement Instrument

Affected Computer Registers	Land District
688510	Canterbury
688741	Canterbury
713202	Canterbury
713203	Canterbury
713204	Canterbury
713205	Canterbury
713206	Canterbury
713207	Canterbury
713208	Canterbury
713211	Canterbury
713212	Canterbury
713213	Canterbury
713214	Canterbury
713215	Canterbury
713216	Canterbury
713221	Canterbury
713222	Canterbury
713226	Canterbury
713227	Canterbury
713228	Canterbury
713229	Canterbury
713230	Canterbury

Annexure Schedule: Contains 9 Pages.

Grantor Certifications

I certify that I have the authority to act for the Grantor and that the party has the legal capacity to authorise me to lodge this instrument ☑

I certify that I have taken reasonable steps to confirm the identity of the person who gave me authority to lodge this instrument ☑

I certify that any statutory provisions specified by the Registrar for this class of instrument have been complied with or do not apply ☑

I certify that I hold evidence showing the truth of the certifications I have given and will retain that evidence for the prescribed period ☑

Mortgage 9937020.2 does not affect the servient tenement, therefore the consent of the Mortgagee is not required ☑

Signature

Signed by Scott James Holdaway as Grantor Representative for Hurunui District Council on 27/11/2015 10:06 AM

Grantor Certifications

I certify that I have the authority to act for the Grantor and that the party has the legal capacity to authorise me to lodge this instrument ☑

I certify that I have taken reasonable steps to confirm the identity of the person who gave me authority to lodge this instrument ☑

© Copyright: Land Information New Zealand

Grantor Certifications

I certify that any statutory provisions specified by the Registrar for this class of instrument have been complied with or do not apply ☑

I certify that I hold evidence showing the truth of the certifications I have given and will retain that evidence for the prescribed period ☑

I certify that the Mortgagee under Mortgage 9937020.2 has consented to this transaction and I hold that consent ☑

Signature

Signed by Joanna Alison Turnbull as Grantor Representative for LMM Investments 2012 Limited, Huntingdon Trustees (2007) Limited on 19/02/2016 09:06 AM

Grantee Certifications

I certify that I have the authority to act for the Grantee and that the party has the legal capacity to authorise me to lodge this instrument ☑

I certify that I have taken reasonable steps to confirm the identity of the person who gave me authority to lodge this instrument ☑

I certify that any statutory provisions specified by the Registrar for this class of instrument have been complied with or do not apply ☑

I certify that I hold evidence showing the truth of the certifications I have given and will retain that evidence for the prescribed period ☑

Signature

Signed by Scott James Holdaway as Grantee Representative on 27/11/2015 09:56 AM

***** End of Report *****

© Copyright: Land Information New Zealand

Form B

Easement instrument to grant easement or *profit à prendre*, or create land covenant

(Sections 90A and 90F Land Transfer Act 1952)

Grantor

LMM INVESTMENTS 2012 LIMITED, HUNTINGDON TRUSTEES (2007) LIMITED and HURUNUI DISTRICT COUNCIL

Grantee

HURUNUI DISTRICT COUNCIL

Grant of Easement or *Profit à prendre* or Creation of Covenant

The Grantor being the registered proprietor of the servient tenement(s) set out in Schedule A **grants to the Grantee** (and, if so stated, in gross) the easement(s) or *profit(s) à prendre* set out in Schedule A, **or creates** the covenant(s) **set out** in Schedule A, with the rights and powers or provisions set out in the Annexure Schedule(s)

Schedule A *Continue in additional Annexure Schedule, if required*

Purpose (Nature and extent) of easement; *profit* or covenant	Shown (plan reference)	Servient Tenement (Computer Register)	Dominant Tenement (Computer Register) or in gross
Right to drain water	Area R Deposited Plan 488914	Lot 26 Deposited Plan 488914 (CFR 713227)	In Gross
Right to convey water	Areas A, B, C, D, E, F, G, H, I, J, K, L, M, N, P, Q, S, T, U, W, Z, AA, AB, AC, AD, AE, AG and AQ Deposited Plan 488914	Lots 1 - 7, 10 - 15, 21, 25 - 29 and 20 DP 488914 (CFRs 713202 - 713208, 713211 - 713216, 713222, 713226 - 713230 and 713221)	
Right to drain sewage	Areas A, B, C, D, E, F, G, H, I, J, K, L, M, N, P, Q, S, T, U and W Deposited Plan 488914 and Areas X and Y Deposited Plan 485034	Lots 1 - 7, 10 - 15, 21, 25 - 29 and 20 DP 488914 (CFRs 713202 - 713208, 713211 - 713216, 713222, 713226 - 713230 and 713221) and Lots 82 and 201 DP 485054 (CFRs 688510 and 688741)	In Gross

Form B - continued

Easements or *profits à prendre* rights and powers (including terms, covenants and conditions)

Delete phrases in [ ] and insert memorandum number as required; continue in additional Annexure Schedule, if required

~~Unless otherwise provided below, the rights and powers implied in specified classes of easement are those prescribed by the Land Transfer Regulations 2002 and/or Schedule Five of the Property Law Act 2007~~

~~The implied rights and powers are hereby **[varied] [negatived] [added to]** or **[substituted]** by:~~

~~[Memorandum number _____, registered under section 155A of the Land Transfer Act 1952]~~

~~[the provisions set out in Annexure Schedule __]~~

The rights and powers of this easement instrument are those set out in Annexure Schedule 1. All rights and powers implied by the Land Transfer Regulations 2002 and/or Schedule Five of the Property Law Act 2007 are expressly excluded.

Covenant provisions

Delete phrases in [ ] and insert Memorandum number as require; continue in additional Annexure Schedule, if required

~~The provisions applying to the specified covenants are those set out in:~~

~~[Memorandum number _____, registered under section 155A of the Land Transfer Act 1952]~~

~~[Annexure Schedule __]~~

Insert instrument type

Easement

Continue in additional Annexure Schedule, if required

ANNEXURE SCHEDULE 1

1. GRANT OF RIGHTS, POWERS AND PRIVILEGES IN RELATION TO THE RIGHT TO DRAIN WATER

1.1 The Grantee (to the exclusion of the Grantor and any other party) shall have the full free uninterrupted and unrestricted right liberty and licence from time to time and at all times hereafter:

(a) to drain, discharge and convey water (whether sourced from rain, springs, soakage, or seepage) in a free and unimpeded flow through the easement facility and operate all parts of the easement facility in accordance with their intended function; and

(b) to lay, make, construct, inspect, maintain, repair, replace, alter, extend, enlarge or remove the easement facility as the Grantee shall from time to time think fit (including the right to excavate land and make trenches and shafts).

1.2 The easement facility referred to in clauses 1.1(a) and 1.1(b) is the easement facility laid or to be laid along the Easement Area shown as Area R Deposited Plan 488914.

1.3 The "easement facility" in relation to the right to drain water means pipes, conduits, open drains, pumps, tanks (with or without headwalls), manholes, valves, surface boxes, detention basins, swales and other equipment suitable for that purpose, whether above or under the ground and anything in replacement or substitution.

2. GRANT OF RIGHTS, POWERS AND PRIVILEGES IN RELATION TO THE RIGHT TO CONVEY WATER

2.1 The Grantee (to the exclusion of the Grantor and any other party) shall have the full free uninterrupted and unrestricted right liberty and licence from time to time and at all times hereafter:

(a) to take, carry, convey and lead water in a free and unimpeded flow through the easement facility and operate all parts of the easement facility in accordance with their intended function; and

(b) to lay, make, construct, inspect, maintain, repair, replace, alter, extend, enlarge or remove the easement facility as the Grantee shall from time to time think fit (including the right to excavate land and make trenches and shafts).

2.2 The easement facility referred to in clauses 2.1(a) and 2.1(b) is the easement facility laid or to be laid along the Easement Area shown as Areas A, B, C, D, E, F, G, H, I, J, K, L, M, N, P, Q, S, T, U, W, Z, AA, AB, AC, AD, AE, AG and AQ on Deposited Plan

Insert instrument type

Easement

Continue in additional Annexure Schedule, if required

488914.

2.3 The "easement facility" in relation to the right to convey water means pipes, conduits, pumps, pump sheds, storage tanks, water purifying equipment, isolation valves and other equipment suitable for that purpose, whether above or under the ground and anything in replacement or substitution.

3. **GRANT OF RIGHTS, POWERS AND PRIVILEGES IN RELATION TO THE RIGHT TO DRAIN SEWAGE**

3.1 The Grantee (to the exclusion of the Grantor and any other party) shall have the full free uninterrupted and unrestricted right liberty and licence from time to time and at all times hereafter:

(a) to take, carry, convey, lead and drain sewage and other waste material and fluid (including trade wastes) in a free and unimpeded flow through the easement facility and operate all parts of the easement facility in accordance with their intended function; and

(b) to lay, make, construct, inspect, maintain, repair, replace, alter, extend, enlarge or remove the easement facility as the Grantee shall from time to time think fit (including the right to excavate land and make trenches and shafts).

3.2 The easement facility referred to in clauses 3.1(a) and 3.1(b) is the easement facility laid or to be laid along the Easement Area shown as Areas A, B, C, D, E, F, G, H, I, J, K, L, M, N, P, Q, S, T, U and W on Deposited Plan 488914 and Areas X and Y on Deposited Plan 485034.

3.3 The "easement facility" in relation to the right to drain sewage means pipes, conduits, pumps, tanks (with or without headwalls), manholes, valves, vents, surface boxes and other equipment suitable for that purpose, whether above or under the ground and anything in replacement or substitution.

4. **GRANTEE'S GENERAL RIGHTS**

4.1 The Grantee may for the purpose of performing any duty or in the exercise of any rights granted under this easement instrument:

(a) enter upon the Servient Land by the most practicable route from the nearest public street across any part of the Grantor's land;

(b) remain on the Servient Land for a reasonable time for the purposes of completing the work;

(c) bring on to the Servient Land such materials, tools, equipment, machinery,

Insert Instrument type
Easement

Continue in additional Annexure Schedule, if required

vehicles or other things as may be necessary for the purposes of completing the necessary work;

(d) leave any vehicle or equipment on the Servient Land for a reasonable time if work is proceeding; and

(e) generally do and perform such acts and things in or upon the Easement Area as may be necessary or desirable for or in relation to any of the purposes of this easement instrument.

5. **GRANTOR'S OBLIGATIONS**

5.1 The Grantor will not:

(a) build over or erect any other improvements upon, plant trees upon or permit any tree roots to grow within the Easement Area;

(b) do or permit or suffer to be done anything which may in any way injure or damage the easement facility, or obstruct the use and enjoyment of the easement facility, or interfere with free flow and passage through the easement facility; or

(c) permit any Utilities to be located within the Easement Area unless the siting and installation of such Utilities is expressly consented to in writing by the Grantee such consent not to be unreasonably withheld.

5.2 The Grantor will not oppose or object to any application for or issue of a building consent or resource consent in respect of the easement facility or the use or enjoyment of the same.

6. **GRANTEE'S OBLIGATIONS**

6.1 The Grantee shall:

(a) at all times repair, maintain and cleanse the easement facility so that it does not become a nuisance to the Grantor;

(b) remove and carry away all surplus clay, gravel, shingle, stones and earth which may be excavated from the Easement Area;

(c) upon disturbing the surface of the Easement Area for any reason, without delay restore the same as nearly as reasonably possible to its original condition; and

(d) repair and make good any damage which may be done to any fence, building or improvement, or to any part of the Grantor's land, in the exercise by the Grantee of any of the rights granted by this easement instrument but the Grantee shall

Insert instrument type
Easement

Continue in additional Annexure Schedule, if required

not be:

(i) responsible for the cost of removing any fence, building, improvements or trees upon, or any tree roots growing within, the Easement Area; or

(ii) liable for any damage to any Utilities in the Easement Area if in the exercise of such rights that damage could not reasonably be prevented.

7. STRUCTURES TO BE PROPERTY OF GRANTEE

7.1 The easement facility shall at all times be and remain the property of the Grantee.

8. MUTUAL COVENANTS

8.1 Nothing contained or implied in this easement instrument shall be construed so as:

(a) to compel the Grantee to exercise all or any of the rights granted by this easement instrument at any time and the Grantee may commence discontinue or resume the exercise of all or any such rights at will; or

(b) to abrogate limit restrict or abridge any of the rights, powers or remedies vested in the Grantee by statute.

9. LIMITATION OF LIABILITY

9.1 Any right of action which shall at any time accrue to the Grantee by reason of breach or non-observance by the Grantor of any of the covenants contained in this easement instrument may be enforced by the Grantee only against:

(a) the registered proprietor for the time being of that part of the Servient Land in respect of which such breach or non-observance shall occur; and

(b) the registered proprietor at the time of such occurrence,

to the intent that the liability of any registered proprietor of the Servient Land shall cease (except as to any breach or non-observance occurring during the period of ownership of that registered proprietor) upon registration of a transfer of ownership.

10. GENERAL PROVISIONS

10.1 The following provisions are applicable to the easements granted by this easement instrument:

(a) each grant shall be for all time;

(b) the use of each easement shall be without any limitation as to quantity or frequency;

Insert instrument type
Easement

Continue in additional Annexure Schedule, if required

(c) no power is implied in respect of any easement for the Grantor to determine the easement for breach of any provision of this easement instrument (whether express or implied) or for any other cause, it being the intention of the parties that the easement shall subsist unless it is surrendered in writing;

(d) if any party ("the defaulting party") neglects or refuses to perform any of its obligations under this easement instrument the following shall apply:

(i) the other party may serve upon the defaulting party a written notice requiring the defaulting party to perform its obligations and stating that, after the expiration of seven day period from service of such notice, the other party shall perform such obligations;

(ii) if upon the expiry of the seven day period referred to above, the defaulting party has still neglected or refused to perform the obligation the other party may:

(1) perform such obligation; and

(2) for that purpose enter onto the Grantor's land and carry out any work;

(iii) the defaulting party shall be liable to pay the other party all costs incurred in performing such obligations;

(e) notwithstanding the requirement to give notice under clause 10.1(d) above, where the Grantor has not complied with an obligation under this easement instrument and as a result the Grantee's use of the easement facility has been obstructed in any way, then the Grantee may immediately undertake all works required to ensure the unimpeded use of the easement facility and recover any costs from the Grantor; and

(f) the Grantor shall not do any act which impedes, interferes with or restricts the rights of the Grantee and other authorised persons in relation to this easement instrument.

11. DISPUTES

11.1 The parties shall use reasonable endeavours to resolve any dispute or difference arising out of or in connection with this easement instrument in good faith by negotiation. Failing resolution by negotiation the parties may agree to an alternative method to resolve the dispute or difference. However, nothing in this clause will prevent either party from taking immediate steps to seek relief before an appropriate court at any time.

Insert instrument type

Easement

Continue in additional Annexure Schedule, if required

12. INTERPRETATION

12.1 In this easement instrument unless the context otherwise requires:

"Easement Area" means all areas of the Servient Land specified under the heading "Shown (plan reference)" on the front page of this easement instrument in Schedule A.

"Grantee" means the Hurunui District Council, and includes the agents, employees, contractors, tenants, licensees, and other invitees of the Grantee.

"Grantor" means the registered proprietor of the Servient Land, and includes the agents, employees, contractors, tenants, licensees, and other invitees of the Grantor.

"Servient Land" means all land described as the Servient Tenement on the front page of this easement instrument in Schedule A.

"Utilities" means any pipe, conduit, wire, structure, pole or other appurtenant structure for the provision of services to the land, including but not limited to electricity, gas, telephone, storm water, sewage and water services.

12.2 In the interpretation of this easement instrument:

(a) words importing the singular or plural number shall be deemed to include the plural and singular number respectively;

(b) words importing any gender shall include every gender and the word "person" shall include a corporation and vice versa;

(c) the headings appearing are inserted only as a matter of convenience and in no way define, limit or prescribe the scope or intent of the clauses of this easement instrument nor in any way affect this easement instrument;

(d) references to any party include that party's executors, administrators, and assigns, or being a corporate entity, its successors and assigns.

Annexure Schedule Page 7 of 7 Pages

Insert instrument type

Easement

Continue in additional Annexure Schedule, if required

The consent of the **HURUNUI DISTRICT COUNCIL** is given to the within easement for the purposes of section 48(1) of the Reserves Act 1977 pursuant to a delegation from the Minister of Conservation under section 10 of the Reserves Act 1977.

THE COMMON SEAL of **THE HURUNUI DISTRICT COUNCIL** was hereto affixed by and in the presence of:)

HURUNUI DISTRICT COUNCIL THE Common Seal OF

_____ Mayor/Councillor

_____ Councillor/Authorised Officer

PROPOSED NEW DWELLING

4 Pukeko Way, Amberley

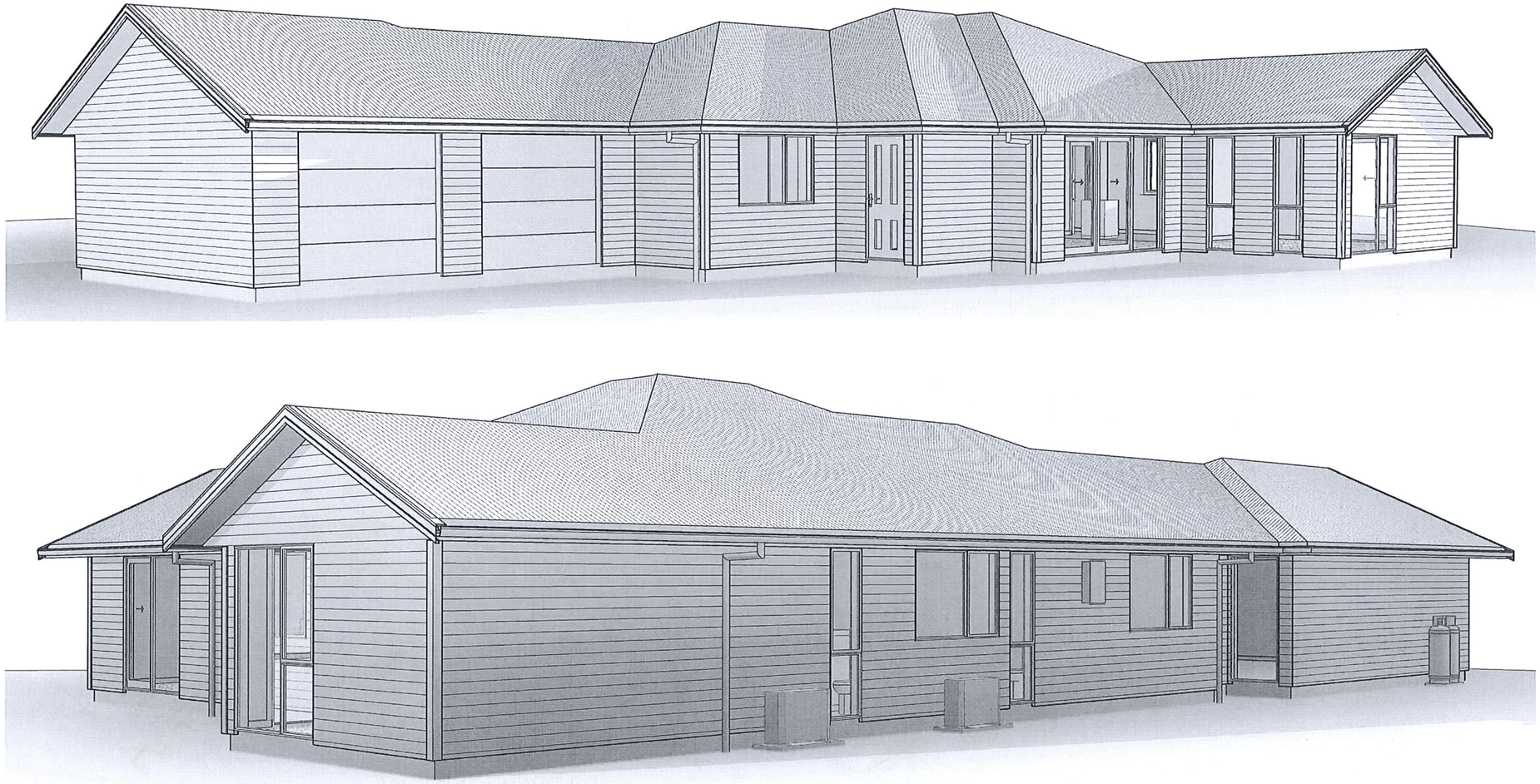

COPYRIGHT: This drawing remains the property of Trident Homes NZ Ltd and may not be used or reproduced in whole or in part without written permission.

TRIDENT HOMES®
CHRISTCHURCH NORTH

LICENSED BUILDING PRACTITIONER
BUILDING CONFIDENCE®

'Always check the LBP Register to ensure you building practitioner is licensed'.

DRAWING LEGEND

SHT	SHEET NAME
01	SITE & DRAINAGE
02	FLOOR PLAN
03	ELEVATIONS
04	FOUNDATION PLAN
05	FOUNDATION DETAILS
06	ROOF PLAN
07	ROOF FLASHING DETAILS
08	BRACING PLAN
09	PLUMBING PLAN
10	DRAINS IN GROUND
11	SECTION
12	STRUCTURE DETAILS
13	CLADDING DETAILS
14	CLADDING DETAILS
15	WET AREA DETAILS
16	FLOOR COVERINGS PLAN
17	JOINERY SCHEDULE

Wind Zone -	High Wind Zone
Exposure Zone -	B
Earthquake Zone -	3
Snow Zone -	N4
Snow Loading -	1 kPa
Altitude -	40m - ASL

Legal Description:	LOT 25 DP 488914
Site Address:	4 Pukeko Way, Amberley
Valuation Number:	2143003127
Site Area:	2246 m²
Zone:	Residential 3
Region:	Hurunui District Council

GENERAL NOTES:

No construction work is to commence until the related building Consent has been obtained. All dimensions & service locations to be checked onsite before commencement of all work. Confirm all Site levels, Floor heights and Site Boundaries before commencement of earthworks. Ground bearing to be confirmed onsite after excavation and before building starts.
PLANS TO BE READ IN CONJUNCTION WITH PROJECT SPECIFICATION.

F5 - WORK SITE BARRIERS.

If the work site is not completely enclosed, and unauthorized entry by children is likely, allow for site fencing when workers are absent from the immediate vicinity. Allow for 2m min high site fence to proposed building perimeter over duration of construction in accordance with Compliance Document Clause F5 of the NZBC. All contractors to abide by Trident Homes safety plan. Allow for toeboards to access and storage platforms, toeboards to be 100min above the platform height (10mm max gap between the platform & toeboard), and no lower than the materials stacked on them unless the materials are restrained from falling.

Sho PW

Proposed NEW DWELLING for
Wendy & Steven Olliver,
Address: 4 Pukeko Way, Amberley

50mm 100mm Original Scale

WIND ZONE CALCULATIONS.

DETERMINATION OF A WIND ZONE - NZS3604:2011

Wind Region -	A
Lee Zone -	No
Ground roughness -	Open
Site exposure -	Exposed
Topography Class -	T1 - Undulations <10m
Building wind zone -	H = Wind speed of 44 m/s

50mm

100mm

DRAINAGE LEGEND

d.p.	Downpipe.
○ip	Inspection Point.
—·—·—·—	Stormwater drain DN 100 @ 1:120 min fall.
●SWC	Existing Stormwater Connection Point, allow for inspection point.
BK	Existing Boundary Kit.
— — — —	DN40 PE100 PN16 pressure sewer line.

Proposed NEW DWELLING for Wendy & Steven Olliver, Address: 4 Pukeko Way, Amberley

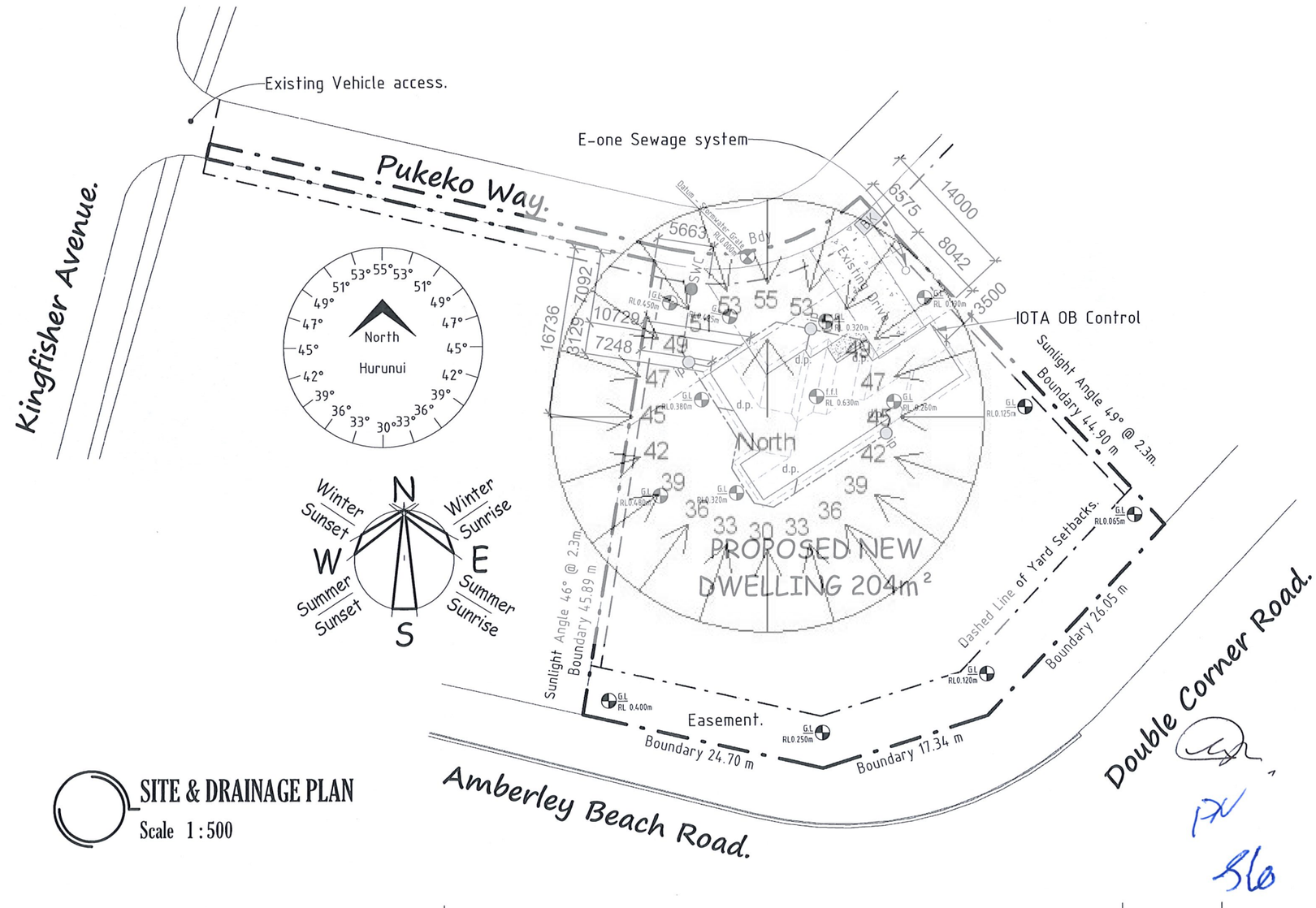

SITE & DRAINAGE PLAN

Scale 1:500

TRIDENTHOMES® CHRISTCHURCH NORTH

COPYRIGHT: This drawing remains the property of Trident Homes NZ Ltd and may not be used or reproduced in whole or in part without written permission.

Project : PROPOSED NEW DWELLING for Client : Wendy & Steven Olliver Address : 4 Pukeko Way, Amberley	JOB # : 4_Pukeko	Drw Name : SITE & DRAINAGE			Builder.	Client.
	Drawn By : LBP 113870	DATE : NOV 2020	NOTE : do not scale from this drawing.	SCALE @ A3 Sht. As indicated	REV # E	DRW # 01

50mm 100mm Original Scale

50mm

100mm

PLUMBING LEGEND

Code	Description	Model
BATH	Bath	Astivita Veneto
DW	Dish Washer	Proprietary
S	Kitchen Sink	Proprietary
SHR	Acrylic shower	1000x1000mm
Tub	Laundry Tub	Proprietary
V	Vanity	900x400mm
WC	Toilet	S Trap
WM	Washing Machine	Proprietary

JOINERY SCHEDULE

Mark	Width	Height	Lintels
GD	2400 mm	2150 mm	190x88 PL8
GD	2400 mm	2150 mm	190x88 PL8
W01	885 mm	2150 mm	2/90x45
W02	1800 mm	1200 mm	140x90 PL8
W03	885 mm	2150 mm	2/90x45
W04	885 mm	2150 mm	2/90x45
W05	1800 mm	1200 mm	140x88 PL8
W06	600 mm	2150 mm	2/90x45
W07	1800 mm	1200 mm	140x88 PL8
W08	600 mm	2150 mm	2/90x45
W09	1800 mm	2150 mm	140x88 PL8
W10	1500 mm	2150 mm	140x88 PL8
W11	1500 mm	1200 mm	190x88 PL8
W12	2000 mm	2150 mm	140x88 PL8
W13	1800 mm	2150 mm	140x88 PL8
W14	600 mm	2150 mm	2/90x45
W15	600 mm	2150 mm	2/90x45
W16	3200 mm	2150 mm	240x88 PL8

A-A 11

ELECTRICAL LEGEND

- S – Smoke Alarm with test & Hush facility.
- MB – Meterbox / Switchboard.

03 West Elevation

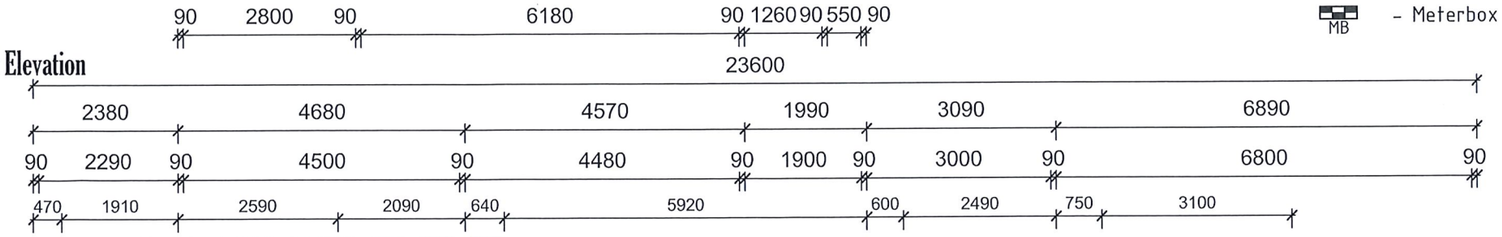

03 North Elevation

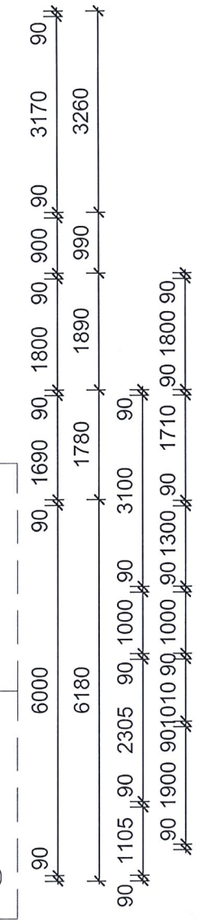

Notes: Allow for boxed external corners in general to linea weatherboard cladding, garage and Bedroom 3 external corners to have soakers.

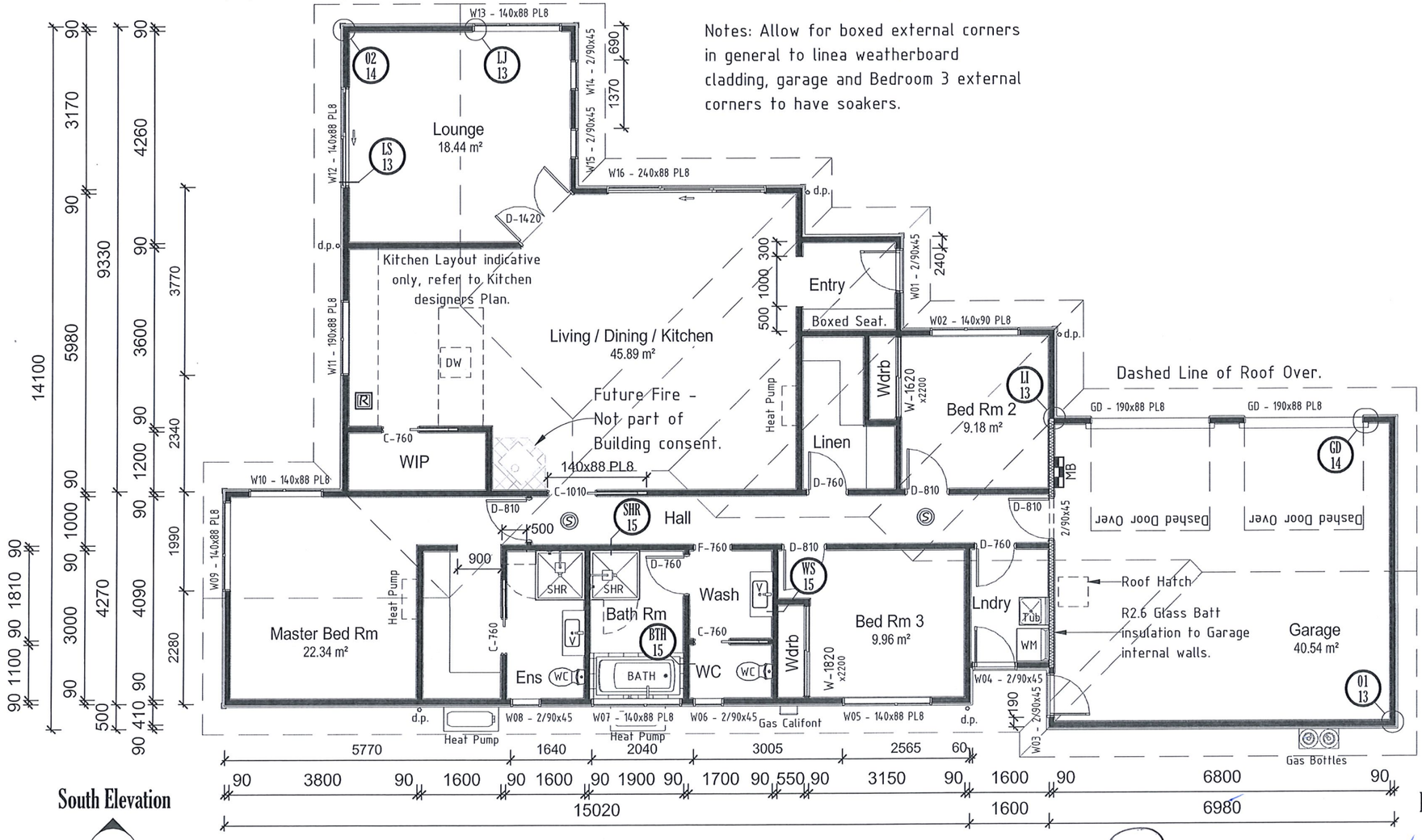

03 South Elevation

03 East Elevation

CONSTRUCTION LEGEND.

- Internal wall.
- External Wall – Linea weatherboards over 20nom Cavity.

PROPOSED FLOOR PLAN

Scale 1 : 100

FLOOR AREA SCHEDULE – CLAD

DESCRIPTION	AREA (O/FRAME) /	PERIMETER (O/FRAME) /	CLAD THICKNESS /	AREA OVER CLAD /
Insitu Slab	204.24 m²	76.79 m	60 mm	208.84 m²

G.F f.f.l	0.000 m
G.F T.P.	2.455 m

TRIDENT HOMES® CHRISTCHURCH NORTH

COPYRIGHT: This drawing remains the property of Trident Homes NZ Ltd and may not be used or reproduced in whole or in part without written permission.

Project : PROPOSED NEW DWELLING for Client : Wendy & Steven Olliver Address : 4 Pukeko Way, Amberley	JOB # : 4_Pukeko	Drw Name : FLOOR PLAN		Builder.	Client.
	Drawn By : LBP 113870	DATE : NOV 2020	NOTE : do not scale from this drawing.	SCALE @ A3 Sht. As indicated	REV # E
					DRW # 02

50mm 100mm Original Scale

50mm

100mm

2.3 m

50°

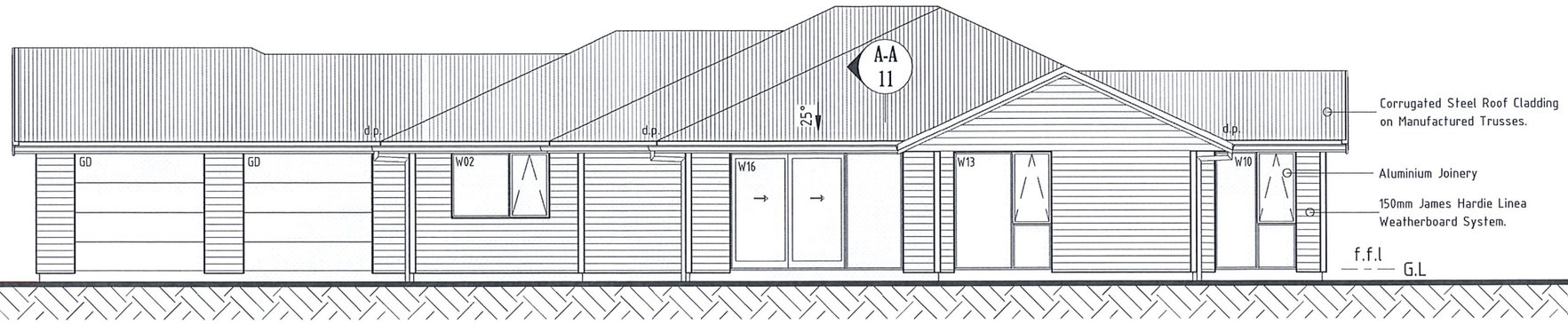

Corrugated Steel Roof Cladding on Manufactured Trusses.

Aluminium Joinery

150mm James Hardie Linea Weatherboard System.

North Elevation
Scale 1:100

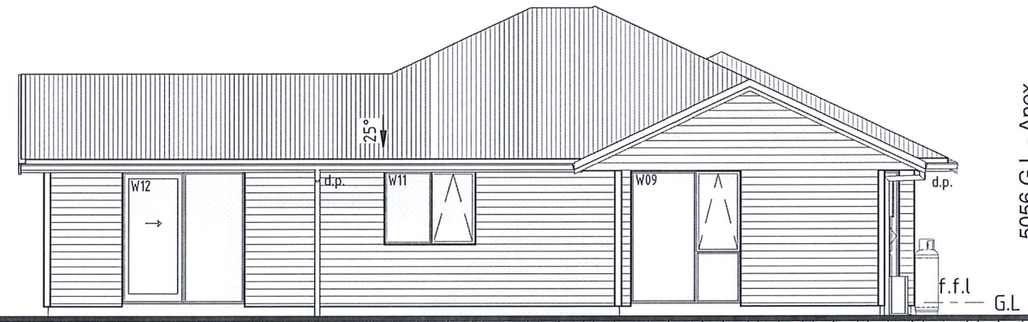

5056 G.L - Apex

BUILDING ENVELOPE RISK MATRIX.

Risk Factor -	Risk -	Score -	Comments -
Wind Zone -	High Risk	1	High Wind Zone.
Number of storeys -	Low Risk	0	One Storey.
Roof/wall design -	Low Risk	0	Fully Protected.
Eaves width -	Medium Risk	1	451 - 600mm single storey.
Envelope complexity -	Low Risk	0	Single cladding.
Deck design -	Low Risk	0	Nil.

Total risk score -	2

NOTE: This risk matrix covers all four elevations.

West Elevation
Scale 1:100

CLAD TO GROUND CLEARANCE NOTES.

f.f.l shall be 150min above crown of road on at least one cross section through the building and road way, or for sites below the road 150min above the lowest point on the Site Boundary.
Excavate locally around perimeter of building, ground to fall away from building not less than 1 in 25 for a minimum distance of 1000mm.
Cladding adjacent to permanent paving - 150min from f.f.l to F.G.L
Allow for 100min between base of cladding and permanent paving.
Cladding adjacent to unprotected ground - 225min from f.f.l to F.G.L
Allow for 175min between base of cladding and Unprotected ground.
Cladding to overlap the concrete slab by 50min.

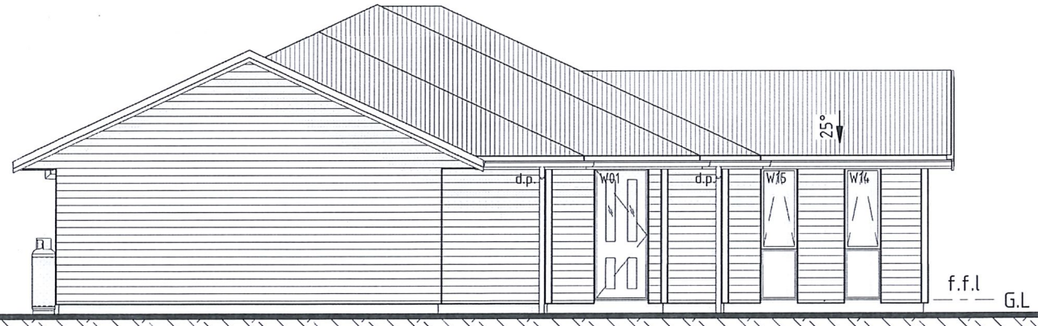

East Elevation
Scale 1:100

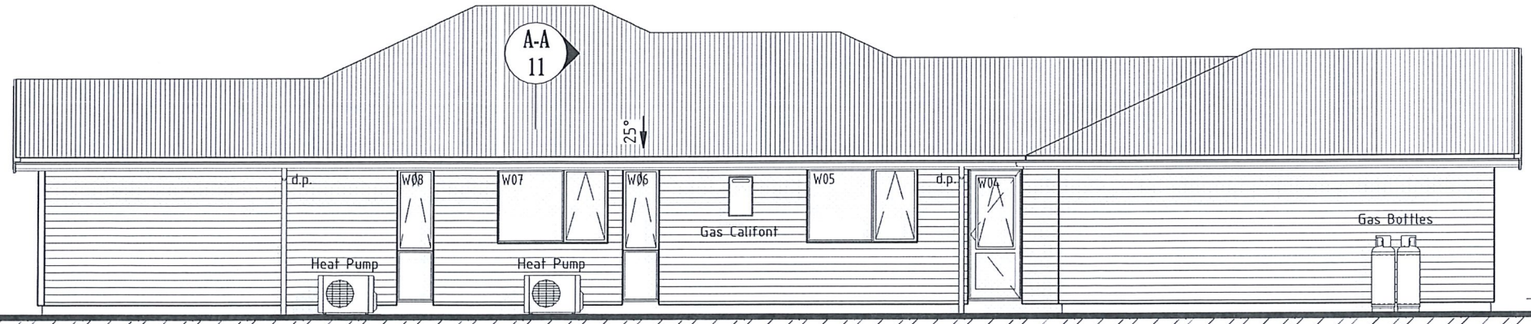

South Elevation
Scale 1:100

TRIDENTHOMES®
CHRISTCHURCH NORTH

COPYRIGHT: This drawing remains the property of Trident Homes NZ Ltd and may not be used or reproduced in whole or in part without written permission.

Project : PROPOSED NEW DWELLING for Client : Wendy & Steven Olliver Address : 4 Pukeko Way, Amberley	JOB # : 4_Pukeko	Drw Name : ELEVATIONS			Builder.	Client.
	Drawn By : LBP 113870	DATE : NOV 2020	NOTE : do not scale from this drawing.	SCALE @ A3 Sht. As indicated	REV # E	DRW # 03

RECORD OF TITLE
UNDER LAND TRANSFER ACT 2017
FREEHOLD
Search Copy

R.W. Muir
Registrar-General
of Land

Identifier	**713226**
Land Registration District	**Canterbury**
Date Issued	19 February 2016

Prior References
95082

Estate	Fee Simple
Area	2246 square metres more or less
Legal Description	Lot 25 Deposited Plan 488914

Registered Owners
Steven Lloyd Olliver and Wendy Joy Anne Olliver

Interests

Comments added to PIM check

10237191.1 Consent Notice pursuant to Section 221 Resource Management Act 1991 - 19.2.2016 at 9:47 am

Subject to a right of way and a right to convey water, electricity, telecommunications and computer media and a right to drain water and sewage over part marked P on DP 488914 created by Easement Instrument 10237191.4 - 19.2.2016 at 9:47 am

Appurtenant hereto is a right of way and a right to convey water, electricity, telecommunications and computer media and a right to drain water and sewage created by Easement Instrument 10237191.4 - 19.2.2016 at 9:47 am — Clear of easement

The easements created by Easement Instrument 10237191.4 are subject to Section 243 (a) Resource Management Act 1991

Subject to a right to convey telecommunications and computer media (in gross) over part marked P on DP 488914 in favour of Chorus New Zealand Limited created by Easement Instrument 10237191.5 - 19.2.2016 at 9:47 am — Clear of easement

The easements created by Easement Instrument 10237191.5 are subject to Section 243 (a) Resource Management Act 1991

Subject to a right to convey electricity (in gross) over part marked P on DP 488914 in favour of MainPower New Zealand Limited created by Easement Instrument 10237191.6 - 19.2.2016 at 9:47 am — Clear of easement

The easements created by Easement Instrument 10237191.6 are subject to Section 243 (a) Resource Management Act 1991

Subject to a right to convey water and to drain sewage (in gross) over part marked P on DP 488914 in favour of the Hurunui District Council created by Easement Instrument 10237191.7 - 19.2.2016 at 9:47 am — Clear of easement

The easements created by Easement Instrument 10237191.7 are subject to Section 243 (a) Resource Management Act 1991

Land Covenant in Easement Instrument 10237191.8 - 19.2.2016 at 9:47 am (Limited as to Duration)

11830264.2 Mortgage to Bank of New Zealand - 28.8.2020 at 10:32 am — N/A

PROPOSED NEW DWELLING

4 Pukeko Way, Amberley



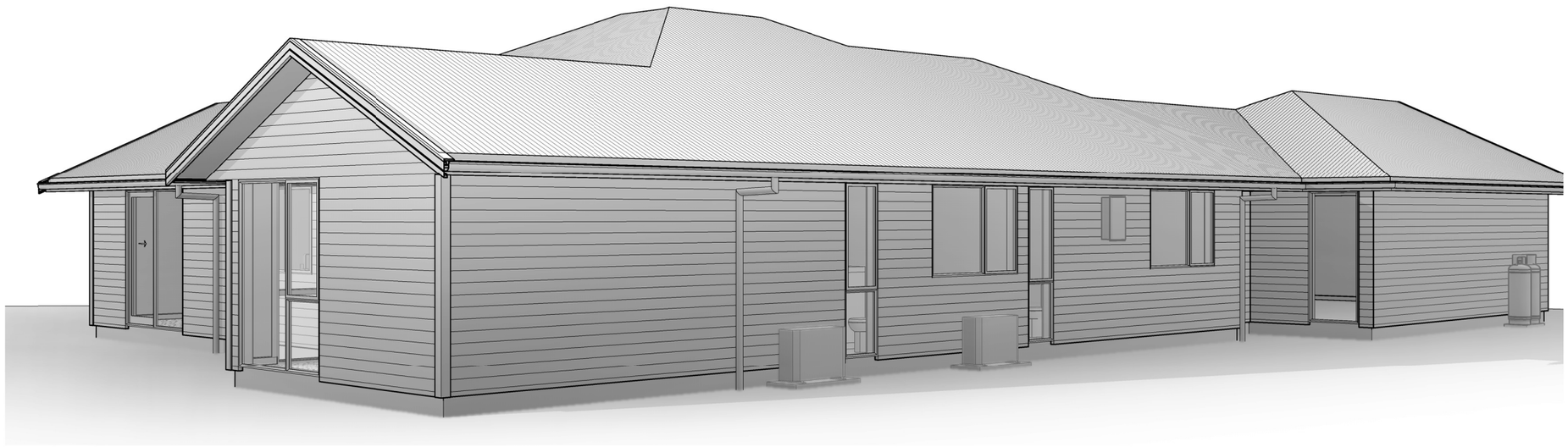

COPYRIGHT: This drawing remains the property of Trident Homes NZ Ltd and may not be used or reproduced in whole or in part without written permission.

TRIDENT HOMES®
CHRISTCHURCH NORTH

LICENSED BUILDING PRACTITIONER • BUILDING CONFIDENCE •

'Always check the LBP Register to ensure you building practitioner is licensed'.

DRAWING LEGEND

SHT	SHEET NAME
01	SITE & DRAINAGE
02	FLOOR PLAN
03	ELEVATIONS
04	FOUNDATION PLAN
05	FOUNDATION DETAILS
06	ROOF PLAN
07	ROOF FLASHING DETAILS
08	BRACING PLAN
09	PLUMBING PLAN
10	DRAINS IN GROUND
11	SECTION
12	STRUCTURE DETAILS
13	CLADDING DETAILS
14	CLADDING DETAILS
15	WET AREA DETAILS
16	FLOOR COVERINGS PLAN
17	JOINERY SCHEDULE

Wind Zone -	High Wind Zone
Exposure Zone -	B
Earthquake Zone -	3
Snow Zone -	N4
Snow Loading -	1 kPa
Altitude -	40m - ASL

Legal Description:	LOT 25 DP 488914
Site Address:	4 Pukeko Way, Amberley
Valuation Number:	2143003127
Site Area:	2246 m²
Zone:	Residential 3
Region:	Hurunui District Council

GENERAL NOTES:

No construction work is to commence until the related building Consent has been obtained. All dimensions & service locations to be checked onsite before commencement of all work. Confirm all Site levels, Floor heights and Site Boundaries before commencement of earthworks. Ground bearing to be confirmed onsite after excavation and before building starts.
PLANS TO BE READ IN CONJUNCTION WITH PROJECT SPECIFICATION.

F5 - WORK SITE BARRIERS.

If the work site is not completely enclosed, and unauthorized entry by children is likely, allow for site fencing when workers are absent from the immediate vicinity. Allow for 2m min high site fence to proposed building perimeter over duration of construction in accordance with Compliance Document Clause F5 of the NZBC. All contractors to abide by Trident Homes safety plan. Allow for toeboards to access and storage platforms, toeboards to be 100min above the platform height (10mm max gap between the platform & toeboard), and no lower than the materials stacked on them unless the materials are restrained from falling.

Proposed NEW DWELLING for
Wendy & Steven Olliver,
Address: 4 Pukeko Way, Amberley

3/02/2021 2:16:59 pm

50mm 100mm Original Scale

50mm

100mm

WIND ZONE CALCULATIONS.

DETERMINATION OF A WIND ZONE - NZS3604:2011

Wind Region -	A
Lee Zone -	No
Ground roughness -	Open
Site exposure -	Exposed
Topography Class -	T1 - Undulations <10m
Building wind zone -	H = Wind speed of 44 m/s

DRAINAGE LEGEND

d.p.	Downpipe.
ip	Inspection Point.
—·—·—·—	Stormwater drain DN 100 @ 1:120 min fall.
BK	Existing Boundary Kit.
— — — — —	DN40 PE100 PN16 pressure sewer line.

Proposed NEW DWELLING for Wendy & Steven Olliver, Address: 4 Pukeko Way, Amberley

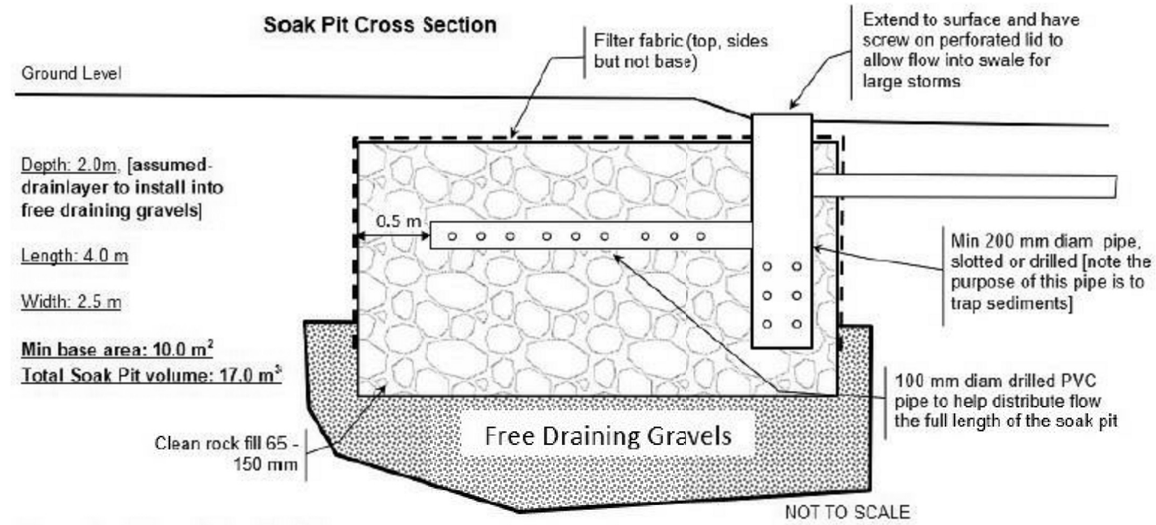

SOAK PIT DETAIL

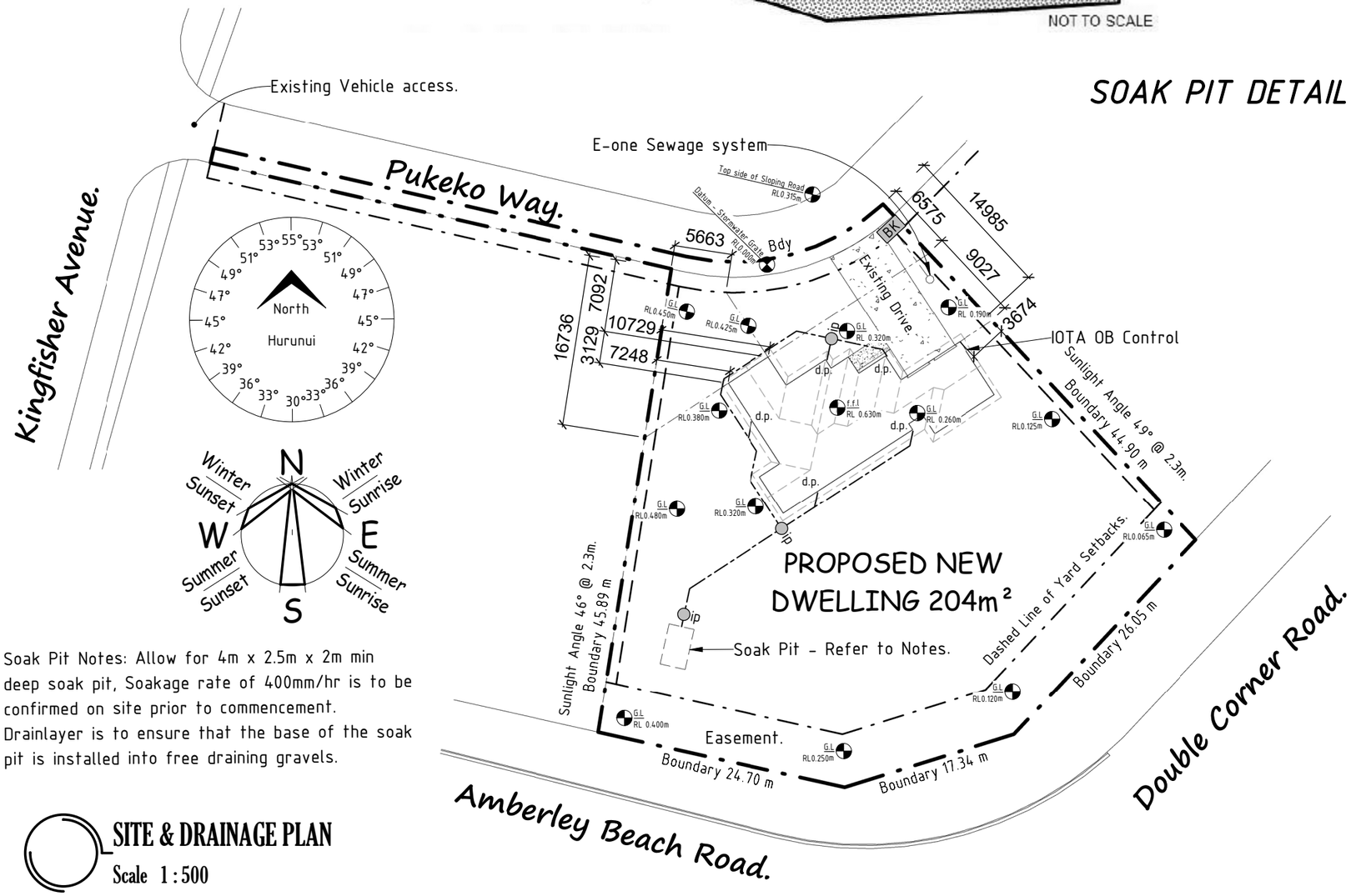

Soak Pit Notes: Allow for 4m x 2.5m x 2m min deep soak pit, Soakage rate of 400mm/hr is to be confirmed on site prior to commencement. Drainlayer is to ensure that the base of the soak pit is installed into free draining gravels.

SITE & DRAINAGE PLAN

Scale 1 : 500

TRIDENT HOMES® CHRISTCHURCH NORTH

COPYRIGHT: This drawing remains the property of Trident Homes NZ Ltd and may not be used or reproduced in whole or in part without written permission.

Project : PROPOSED NEW DWELLING for Client : Wendy & Steven Olliver Address : 4 Pukeko Way, Amberley	JOB # : 4_Pukeko	Drw Name : SITE & DRAINAGE			Builder.	Client.
	Drawn By : LBP 113870	DATE : NOV 2020	NOTE : do not scale from this drawing.	SCALE @ A3 Sht. As indicated	REV # E	DRW # 01

3/02/2021 2:17:03 pm

50mm 100mm Original Scale

50mm

100mm

PLUMBING LEGEND

Code	Description	Model
BATH	Bath	Astivita Veneto
DW	Dish Washer	Proprietary
S	Kitchen Sink	Proprietary
SHR	Acrylic shower	1000x1000mm
Tub	Laundry Tub	Proprietary
V	Vanity	900x400mm
WC	Toilet	S Trap
WM	Washing Machine	Proprietary

JOINERY SCHEDULE

Mark	Width	Height	Lintels
GD	2400 mm	2150 mm	190x88 PL8
GD	2400 mm	2150 mm	190x88 PL8
W01	885 mm	2150 mm	2/90x45
W02	1800 mm	1200 mm	140x90 PL8
W03	885 mm	2150 mm	2/90x45
W04	885 mm	2150 mm	2/90x45
W05	1800 mm	1200 mm	140x88 PL8
W06	600 mm	2150 mm	2/90x45
W07	1800 mm	1200 mm	140x88 PL8
W08	600 mm	2150 mm	2/90x45
W09	1800 mm	2150 mm	140x88 PL8
W10	1500 mm	2150 mm	140x88 PL8
W11	1500 mm	1200 mm	190x88 PL8
W12	2000 mm	2150 mm	140x88 PL8
W13	1800 mm	2150 mm	140x88 PL8
W14	600 mm	2150 mm	2/90x45
W15	600 mm	2150 mm	2/90x45
W16	3200 mm	2150 mm	240x88 PL8

ELECTRICAL LEGEND

- (S) – Smoke Alarm with test & Hush facility.
- MB – Meterbox / Switchboard.

A-A 11

03 West Elevation

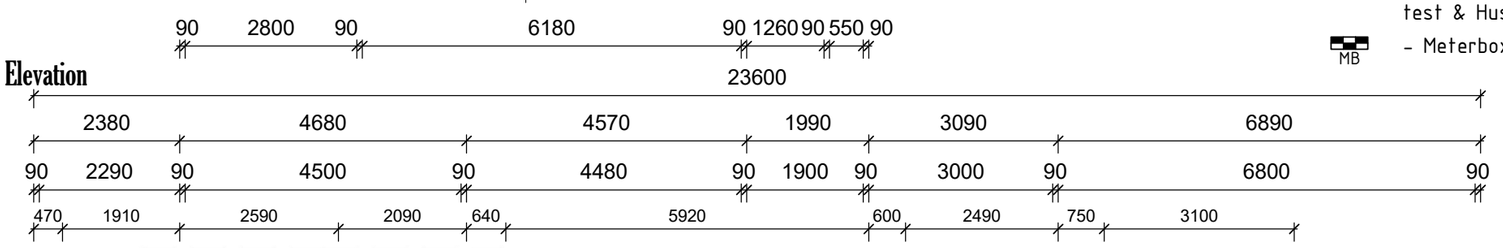

03 North Elevation

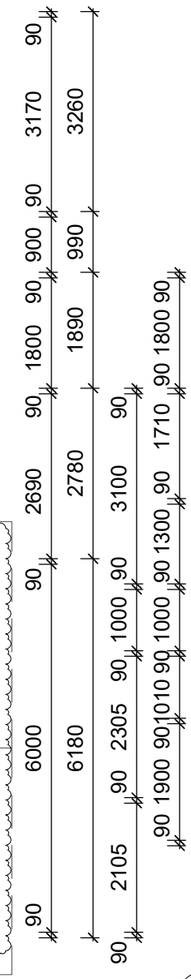

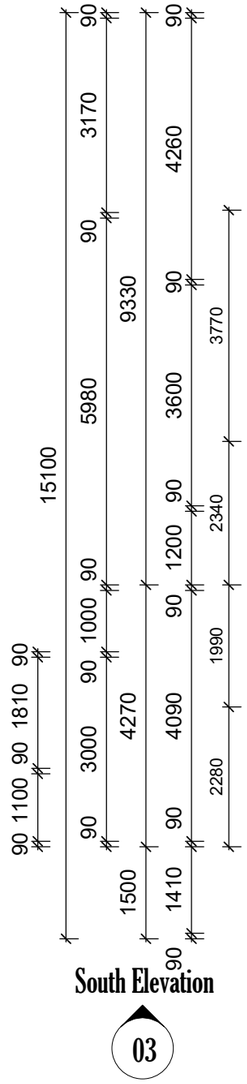

South Elevation

03

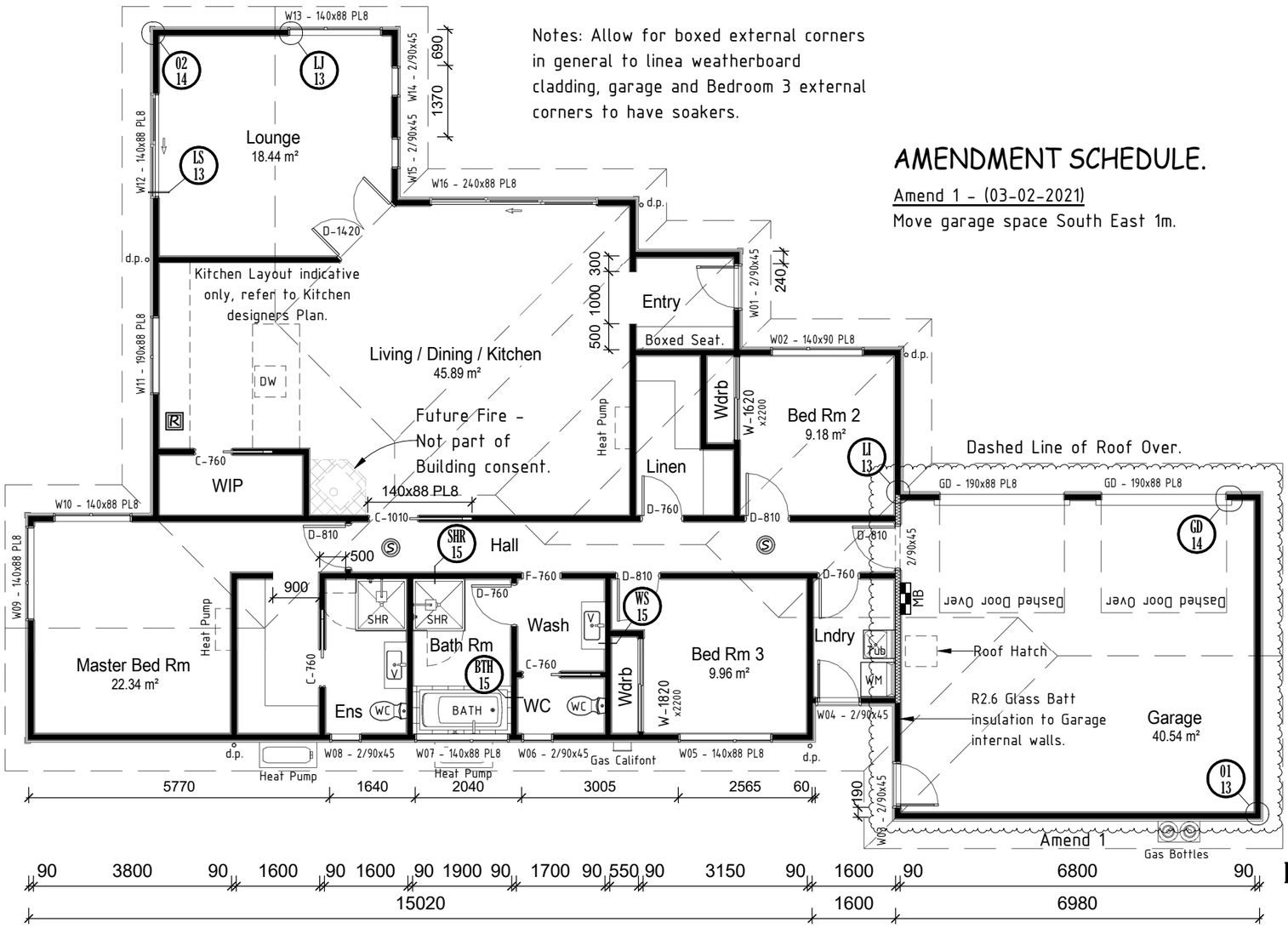

East Elevation 03

Notes: Allow for boxed external corners in general to linea weatherboard cladding, garage and Bedroom 3 external corners to have soakers.

AMENDMENT SCHEDULE.

Amend 1 – (03-02-2021)

Move garage space South East 1m.

CONSTRUCTION LEGEND.

- Internal wall.
- External Wall – Linea weatherboards over 20nom Cavity.

PROPOSED FLOOR PLAN

Scale 1 : 100

FLOOR AREA SCHEDULE – CLAD

DESCRIPTION	AREA (O/FRAME) /	PERIMETER (O/FRAME) /	CLAD THICKNESS /	AREA OVER CLAD /
Insitu Slab	204.33 m²	78.79 m	60 mm	209.05 m²

G.F f.f.l	0.000 m
G.F T.P.	2.455 m

TRIDENT HOMES® CHRISTCHURCH NORTH

COPYRIGHT: This drawing remains the property of Trident Homes NZ Ltd and may not be used or reproduced in whole or in part without written permission.

Project : PROPOSED NEW DWELLING for
Client : Wendy & Steven Olliver
Address : 4 Pukeko Way, Amberley

JOB # : 4_Pukeko
Drawn By : LBP 113870
Drw Name : FLOOR PLAN
DATE : NOV 2020
NOTE : do not scale from this drawing.
SCALE @ A3 Sht. As indicated
Builder.
Client.
REV # E
DRW # 02

3/02/2021 2:17:07 pm

50mm 100mm Original Scale

50mm

100mm

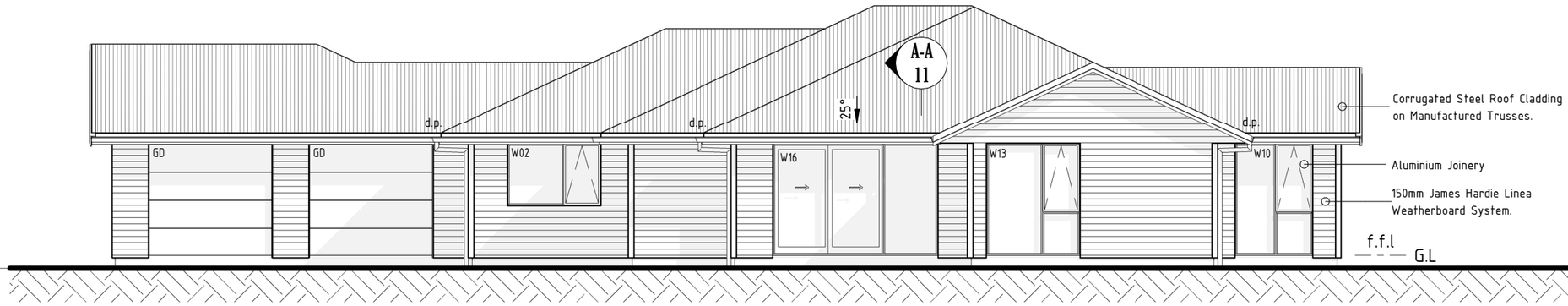

North Elevation
Scale 1 : 100



West Elevation
Scale 1 : 100

BUILDING ENVELOPE RISK MATRIX.

Risk Factor -	Risk -	Score -	Comments -
Wind Zone -	High Risk	1	High Wind Zone.
Number of storeys -	Low Risk	0	One Storey.
Roof/wall design -	Low Risk	0	Fully Protected.
Eaves width -	Medium Risk	1	451 - 600mm single storey.
Envelope complexity -	Low Risk	0	Single cladding.
Deck design -	Low Risk	0	Nil.

Total risk score - 2

NOTE: This risk matrix covers all four elevations.

CLAD TO GROUND CLEARANCE NOTES.

f.f.l shall be 150min above crown of road on at least one cross section through the building and road way, or for sites below the road 150min above the lowest point on the Site Boundary.
Excavate locally around perimeter of building, ground to fall away from building not less than 1 in 25 for a minimum distance of 1000mm.
Cladding adjacent to permanent paving - 150min from f.f.l to F.G.L
Allow for 100min between base of cladding and permanent paving.
Cladding adjacent to unprotected ground - 225min from f.f.l to F.G.L
Allow for 175min between base of cladding and Unprotected ground.
Cladding to overlap the concrete slab by 50min.

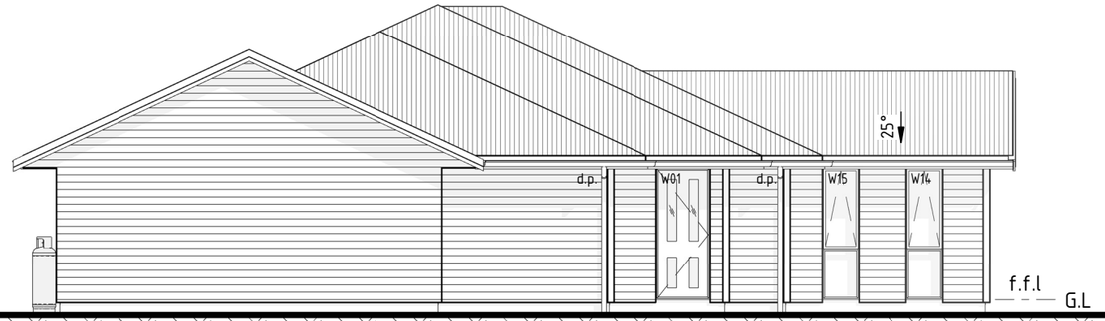

East Elevation
Scale 1 : 100

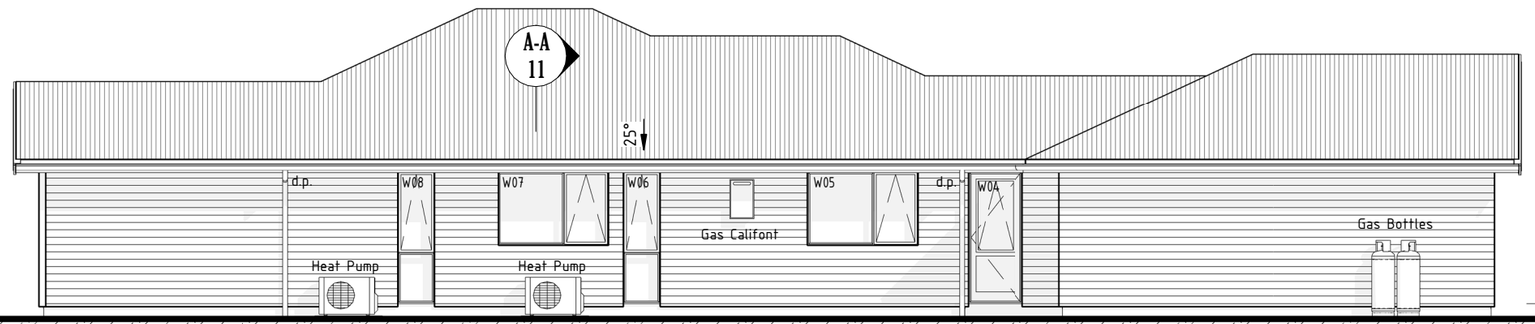

South Elevation
Scale 1 : 100

COPYRIGHT: This drawing remains the property of Trident Homes NZ Ltd and may not be used or reproduced in whole or in part without written permission.

TRIDENTHOMES®
CHRISTCHURCH NORTH

Project : PROPOSED NEW DWELLING for Client : Wendy & Steven Olliver Address : 4 Pukeko Way, Amberley	JOB # : 4_Pukeko	Drw Name : ELEVATIONS			Builder.	Client.
	Drawn By : LBP 113870	DATE : NOV 2020	NOTE : do not scale from this drawing.	SCALE @ A3 Sht. As indicated	REV # E	DRW # 03

3/02/2021 2:17:12 pm

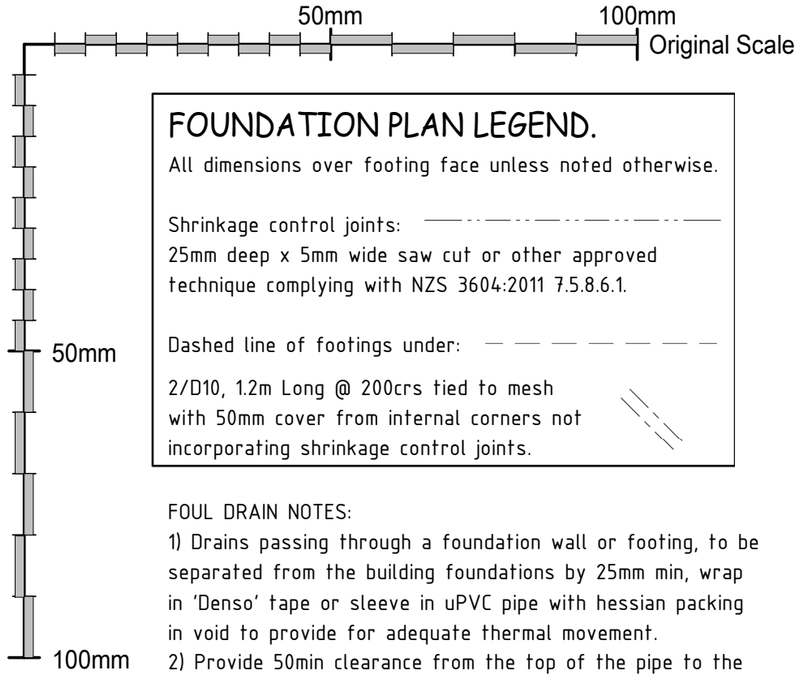

FOUNDATION PLAN LEGEND.

All dimensions over footing face unless noted otherwise.

Shrinkage control joints:
25mm deep x 5mm wide saw cut or other approved technique complying with NZS 3604:2011 7.5.8.6.1.

Dashed line of footings under:

2/D10, 1.2m Long @ 200crs tied to mesh with 50mm cover from internal corners not incorporating shrinkage control joints.

FOUL DRAIN NOTES:

1) Drains passing through a foundation wall or footing, to be separated from the building foundations by 25mm min, wrap in 'Denso' tape or sleeve in uPVC pipe with hessian packing in void to provide for adequate thermal movement.
2) Provide 50min clearance from the top of the pipe to the under side of the slab with no junctions at an angle of more than 45°, all pipework cast into concrete slab to be wrapped in 'Denso' tape or sleeve in uPVC pipe with hessian packing in void to provide for adequate thermal movement.

NOTES: ⌖ Drain Waste.

1) Check all waste locations with manufacturers specifications, locations are indicative only, plumber to confirm dims on site.
2) Refer to Kitchen Designers Plan for Sink waste Location.
3) Refer to footing details for foundation notes.

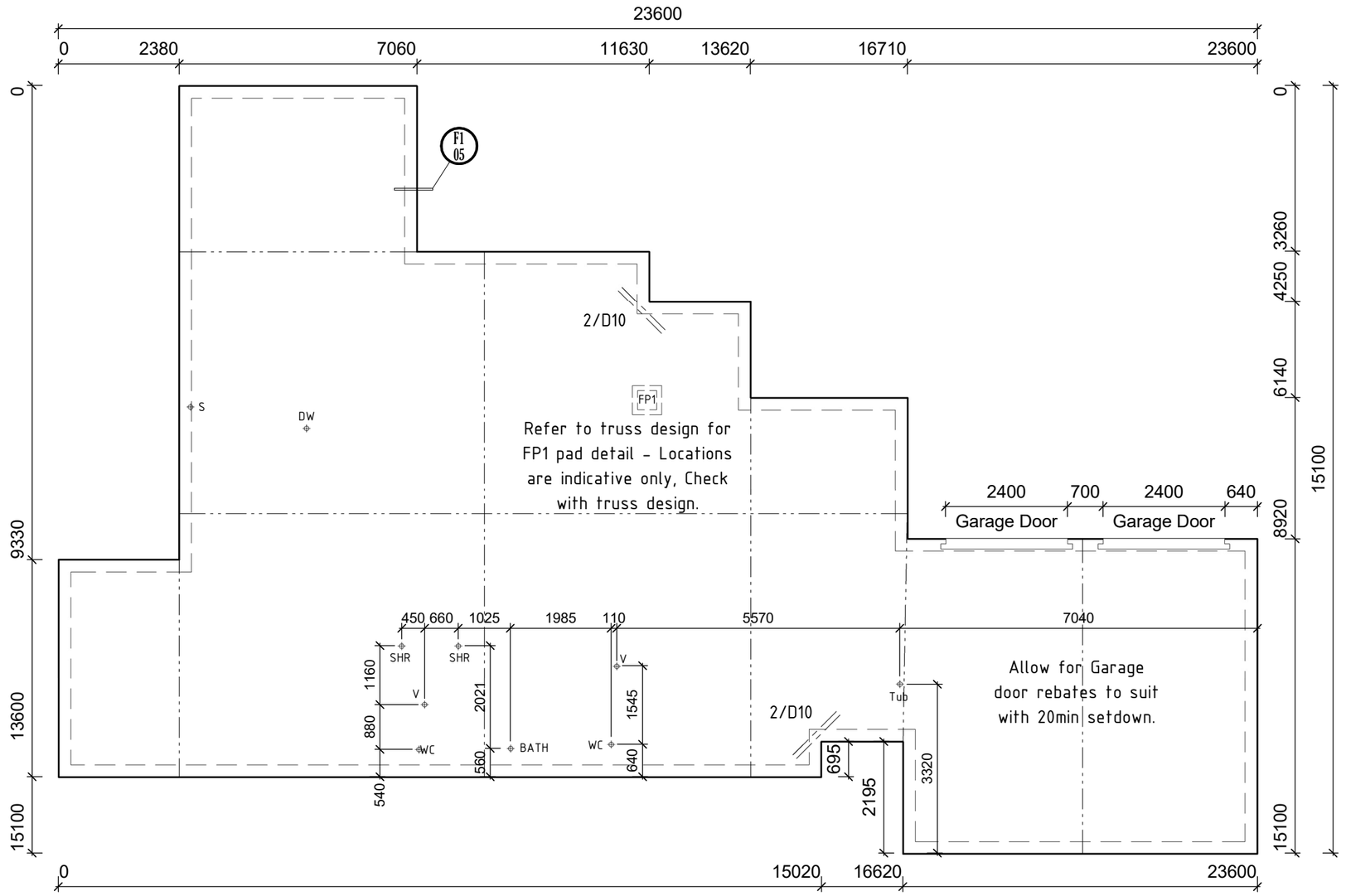

Allow for Electrical earth rod located below meterbox as detailed.

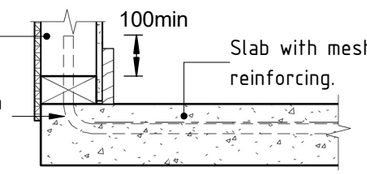

EARTH ROD DETAIL

Scale 1 : 10

FOUNDATION PLAN

Scale 1 : 100

FLOOR AREA SCHEDULE - CLAD

DESCRIPTION	AREA (O/FRAME) /	PERIMETER (O/FRAME) /	CLAD THICKNESS /	AREA OVER CLAD /
Insitu Slab	204.33 m²	78.79 m	60 mm	209.05 m²

TRIDENTHOMES®
CHRISTCHURCH NORTH

COPYRIGHT: This drawing remains the property of Trident Homes NZ Ltd and may not be used or reproduced in whole or in part without written permission.

Project : PROPOSED NEW DWELLING for Client : Wendy & Steven Olliver Address : 4 Pukeko Way, Amberley	JOB # : 4_Pukeko	Drw Name : FOUNDATION PLAN			Builder.	Client.
	Drawn By : LBP 113870	DATE : NOV 2020	NOTE : do not scale from this drawing.	SCALE @ A3 Sht. As indicated	REV # E	DRW # 04

3/02/2021 2:17:15 pm

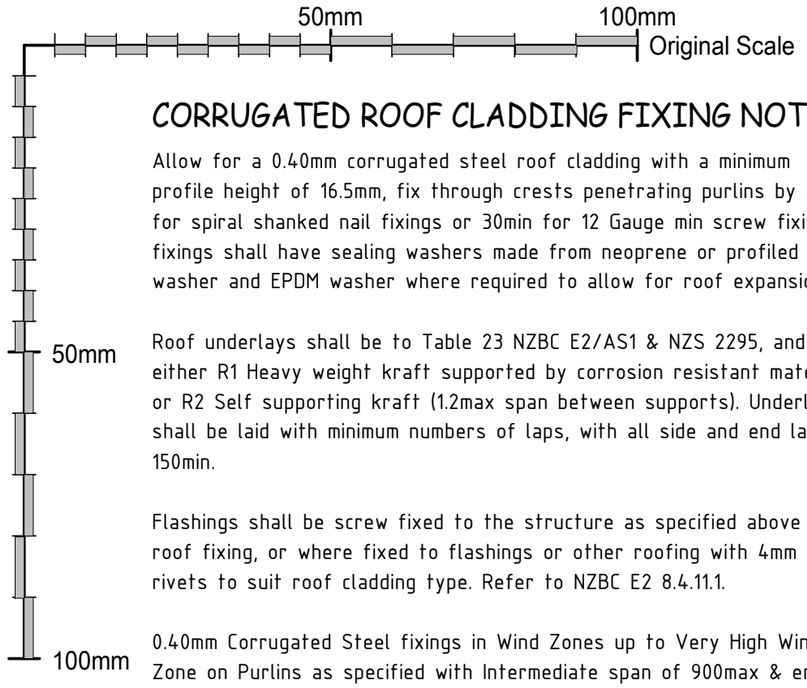

CORRUGATED ROOF CLADDING FIXING NOTES.

Allow for a 0.40mm corrugated steel roof cladding with a minimum profile height of 16.5mm, fix through crests penetrating purlins by 40min for spiral shanked nail fixings or 30min for 12 Gauge min screw fixings, fixings shall have sealing washers made from neoprene or profiled washer and EPDM washer where required to allow for roof expansion.

Roof underlays shall be to Table 23 NZBC E2/AS1 & NZS 2295, and be either R1 Heavy weight kraft supported by corrosion resistant material, or R2 Self supporting kraft (1.2max span between supports). Underlays shall be laid with minimum numbers of laps, with all side and end laps at 150min.

Flashings shall be screw fixed to the structure as specified above for roof fixing, or where fixed to flashings or other roofing with 4mm dia rivets to suit roof cladding type. Refer to NZBC E2 8.4.11.1.

0.40mm Corrugated Steel fixings in Wind Zones up to Very High Wind Zone on Purlins as specified with Intermediate span of 900max & end span of 600max, fix as follows "Hit 1, Miss1, Hit 1, Miss 2".

DOWN PIPE SCHEDULE			
PITCH	Prefix	Size	Max Area Served
Allow for Stratco Quad gutter with 6,200mm² cross section area.			
25.00°	d.p.	80Ø	85 m²
25.00°	d.p.	80Ø	85 m²
25.00°	d.p.	80Ø	85 m²
25.00°	d.p.	80Ø	85 m²
25.00°	d.p.	80Ø	85 m²
Total Roof Area Served			425 m²

ROOF AREA & BRACING SCHEDULE - Hip & Gable							
PITCH	SURFACE AREA	PLAN AREA	Light Roof	Braces Required	Hips & Valleys	Additional Braces Required	ROOF BRACING REQUIRED
25°	276.4 m²	250.5 m²	Yes	6	10	0	No

ROOF BRACING LEGEND.

Brace.

Allow for Continuous 90x19mm timber Brace at 45° to the ridge line spanning from the ridge to the supporting wall were specified - Refer to project spec for Timber Roof Plane Brace spec.

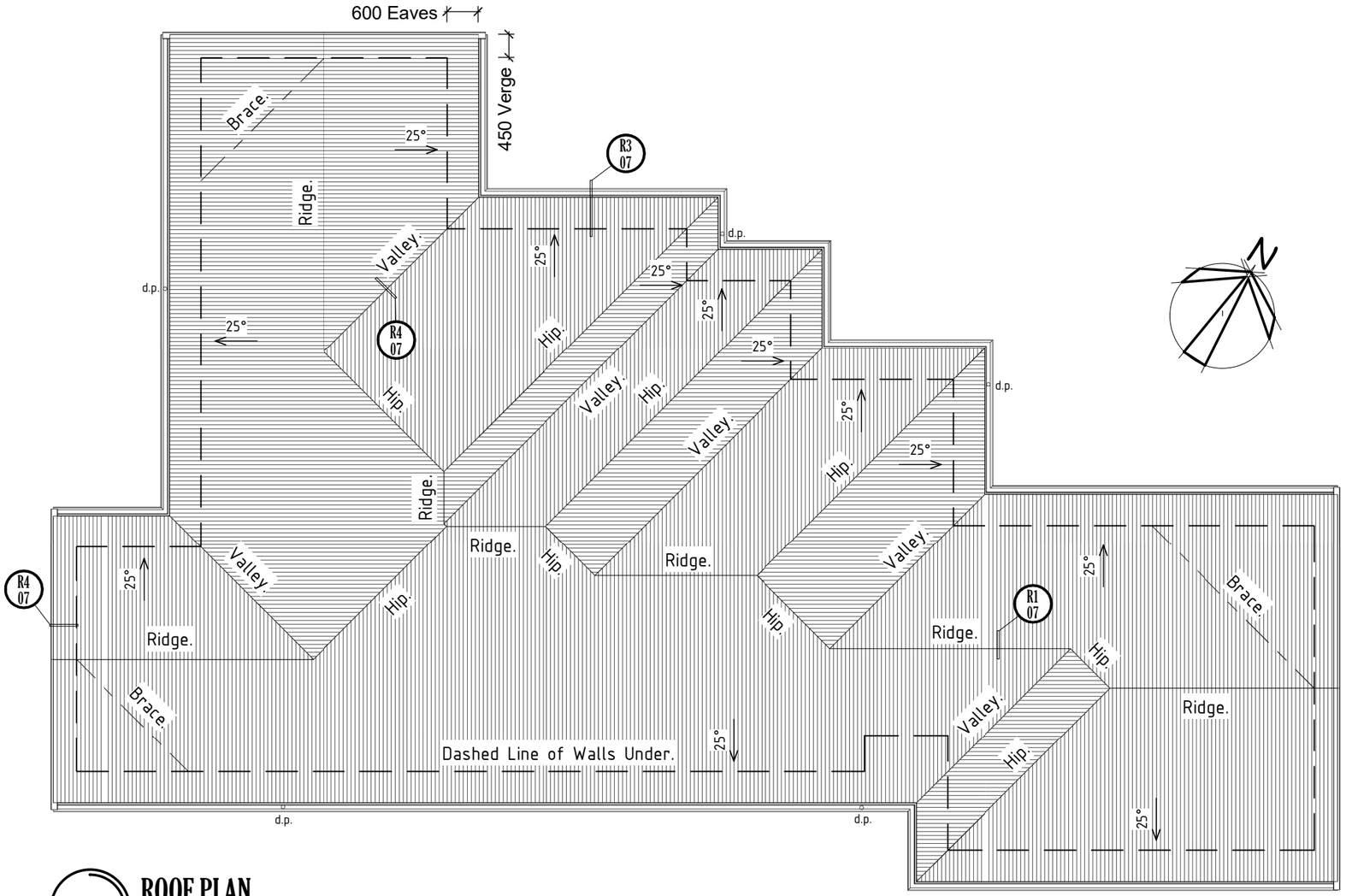

ROOF PLAN

Scale 1:100

TRIDENTHOMES®
CHRISTCHURCH NORTH

COPYRIGHT: This drawing remains the property of Trident Homes NZ Ltd and may not be used or reproduced in whole or in part without written permission.

Project : PROPOSED NEW DWELLING for Client : Wendy & Steven Olliver Address : 4 Pukeko Way, Amberley	JOB # : 4_Pukeko	Drw Name : ROOF PLAN			Builder.	Client.
	Drawn By : LBP 113870	DATE : NOV 2020	NOTE : do not scale from this drawing.	SCALE @ A3 Sht. As indicated	REV # E	DRW # 06

3/02/2021 2:17:18 pm

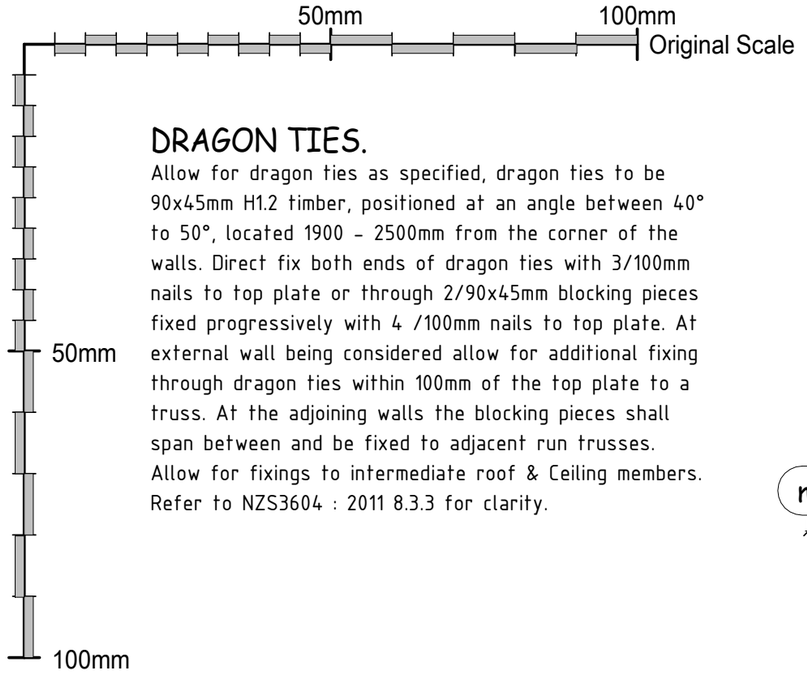

DRAGON TIES.

Allow for dragon ties as specified, dragon ties to be 90x45mm H1.2 timber, positioned at an angle between 40° to 50°, located 1900 - 2500mm from the corner of the walls. Direct fix both ends of dragon ties with 3/100mm nails to top plate or through 2/90x45mm blocking pieces fixed progressively with 4 /100mm nails to top plate. At external wall being considered allow for additional fixing through dragon ties within 100mm of the top plate to a truss. At the adjoining walls the blocking pieces shall span between and be fixed to adjacent run trusses. Allow for fixings to intermediate roof & Ceiling members. Refer to NZS3604 : 2011 8.3.3 for clarity.

Code	Description	Bracket
GS1-N	Gib Std One Side Only	No
Sys 1	RigidRAP 1 Side	Yes
Sys 2	RigidRAP 1 Side	Yes
Sys 3	RigidRAP 1 Side	Yes
Sys 4	RigidRAP 1 Side	Yes
Sys 5	RigidRAP 1 Side	Yes

WALL BRACING LEGEND.

A ——-—— Bracing Line

A1/1.200/GS1-N

Bracing #/ Length/ Element type

Note - Do not install brace elements behind showers or baths.

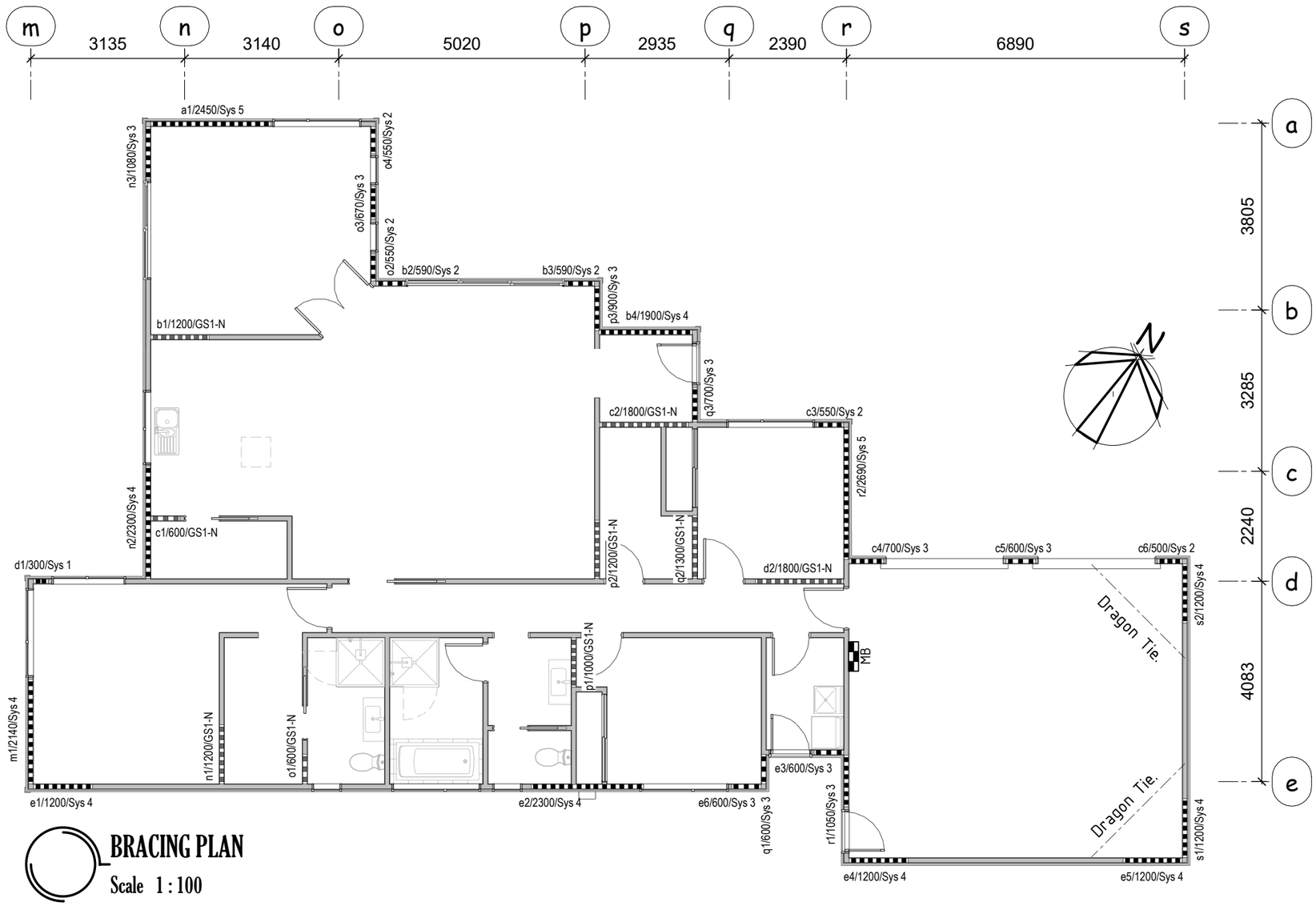

BRACING PLAN

Scale 1 : 100

TRIDENTHOMES®
CHRISTCHURCH NORTH

COPYRIGHT: This drawing remains the property of Trident Homes NZ Ltd and may not be used or reproduced in whole or in part without written permission.

Project : PROPOSED NEW DWELLING for Client : Wendy & Steven Olliver Address : 4 Pukeko Way, Amberley	JOB # : 4_Pukeko	Drw Name : BRACING PLAN			Builder.	Client.
	Drawn By : LBP 113870	DATE : NOV 2020	NOTE : do not scale from this drawing.	SCALE @ A3 Sht. As indicated	REV # E	DRW # 08

3/02/2021 2:17:23 pm

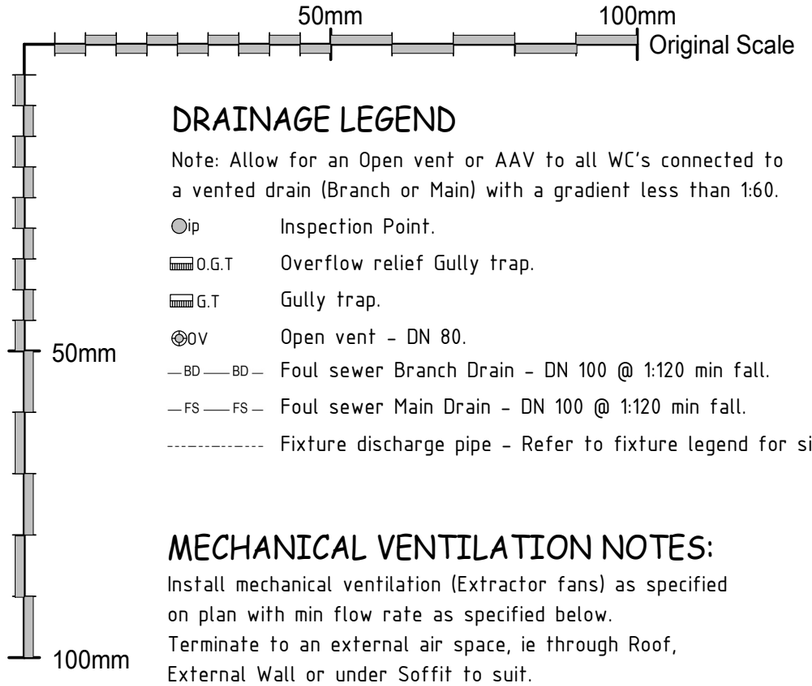

DRAINAGE LEGEND

Note: Allow for an Open vent or AAV to all WC's connected to a vented drain (Branch or Main) with a gradient less than 1:60.

ip	Inspection Point.
O.G.T	Overflow relief Gully trap.
G.T	Gully trap.
OV	Open vent - DN 80.
BD BD	Foul sewer Branch Drain - DN 100 @ 1:120 min fall.
FS FS	Foul sewer Main Drain - DN 100 @ 1:120 min fall.
----------	Fixture discharge pipe - Refer to fixture legend for sizing.

MECHANICAL VENTILATION NOTES:

Install mechanical ventilation (Extractor fans) as specified on plan with min flow rate as specified below.
Terminate to an external air space, ie through Roof, External Wall or under Soffit to suit.

AS 1668.2 Exhaust Rates.
Bathroom & Toilets - 25l/s per Room.
Laundry - 20l/s per Room.
Kitchens - 50l/s per Room.

ELECTRICAL LEGEND

- R - Rangehood Extractor.
- V - Vent - Ceiling extracted.

VENTILATION CALCS SCHEDULE

SPACE NAME	SPACE AREA	JOINERY MARK	NET OPENABLE AREA	VENTILATION % OF FLOOR AREA	VENT REQUIRED
WC	1.81 m^2	W06	0.65 m^2	35.8%	No

PLUMBING - FIXTURE SCHEDULE G13 - Mains Pressure

Code	#	Description	Model	Fixture Construction Standards	Pipe DU's	Discharge Pipe Size G13/AS1	Gradient	Individual max unvented discharge pipe length	Min DN Fixture Vent Pipe	HW Pipe ø	General Notes
BATH	1	Bath	Astivita Veneto	NZS 2023	4 DU's	DN 40	1:40	3.5m	DN 40	15mm*	*Based on 20max pipe run
DW	1	Dish Washer	Proprietary								Discharge to Sink Trap
S	1	Kitchen Sink	Proprietary	NZS 1730	3 DU's	DN 50	1:40	3.5m	DN 32	15mm*	*10mm for pipe run >12m
SHR	2	Acrylic shower	1000x1000mm	AS3588	2 DU's	DN 40	1:40	3.5m	DN 32	20mm*	*15mm for seperate pipe from HWC to single outlet
Tub	1	Laundry Tub	Proprietary	NZBC G2/AS1	5 DU's	DN 40	1:30	3.5m	DN 32	15mm*	*Based on 20max pipe run.
V	2	Vanity	900x400mm	NZS 1730	1 DU	DN 32	1:20	3.5m	DN 32	10mm*	*Based on 20max pipe run.
WC	2	Toilet	S Trap	G1/AS1	4 DU's	DN 100	1:60	6m	DN 40	N/A	Cisten Flush
WM	1	Washing Machine	Proprietary	~	~	~	0	~	~	~	Discharge to Laundry Tub
Total Fixtures: 11											

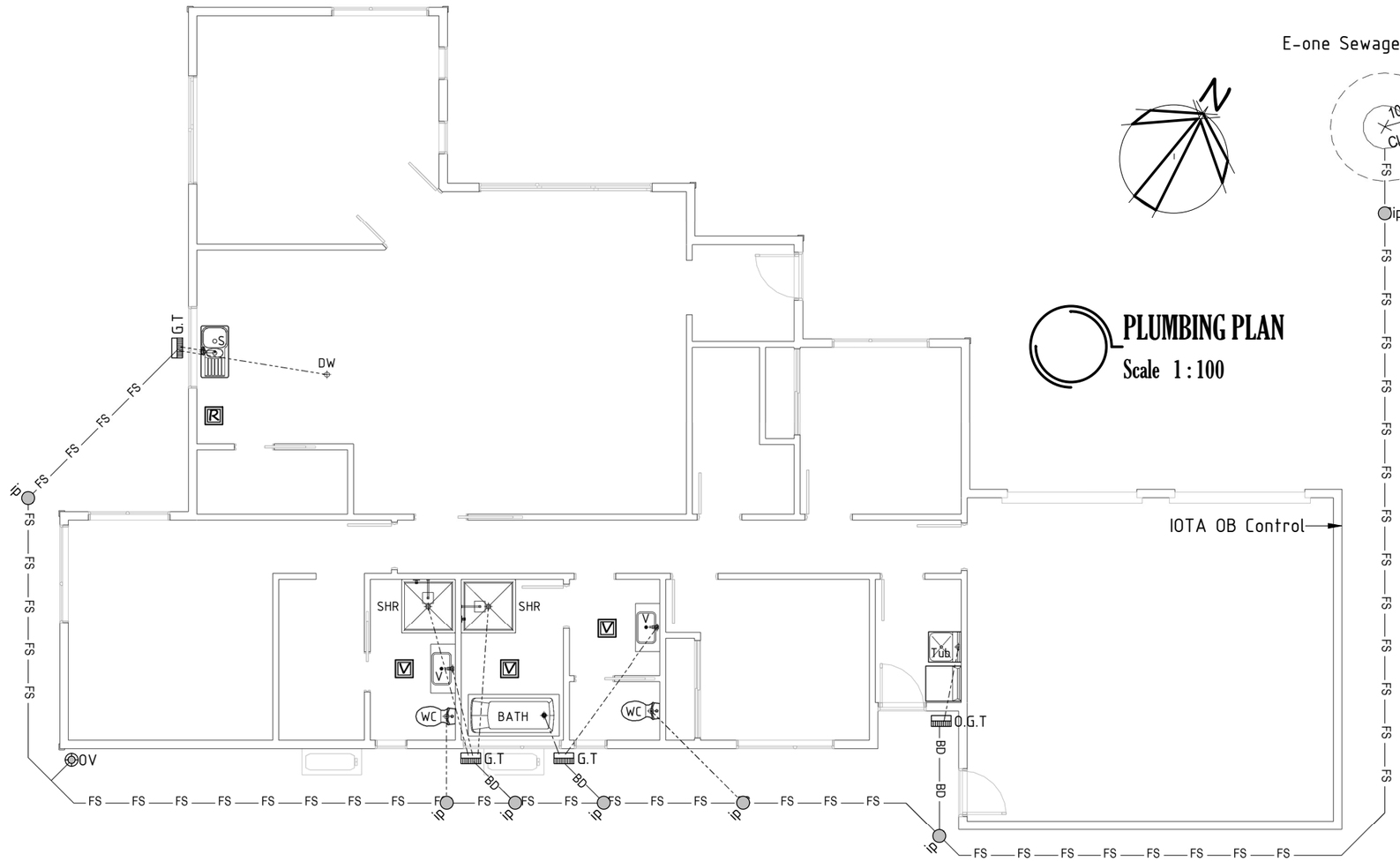

E-one Sewage system

PLUMBING PLAN
Scale 1:100

TRIDENTHOMES®
CHRISTCHURCH NORTH

COPYRIGHT: This drawing remains the property of Trident Homes NZ Ltd and may not be used or reproduced in whole or in part without written permission.

Project : PROPOSED NEW DWELLING for Client : Wendy & Steven Olliver Address : 4 Pukeko Way, Amberley	JOB # : 4_Pukeko	Drw Name : PLUMBING PLAN			Builder.	Client.
	Drawn By : LBP 113870	DATE : NOV 2020	NOTE : do not scale from this drawing.	SCALE @ A3 Sht. As indicated	REV # E	DRW # 09

3/02/2021 2:17:26 pm

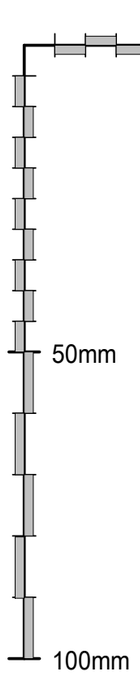

WIND SPECIFIC FIXING SCHEDULE - HIGH WIND ZONE.

NOTE : Allow for fasteners as specified or alternative fasteners with an equivalent capacity.

Connection / Junction	Required fixing Type or Alternative fixing requirements.
Purlins - Roof framing.	1/10g self drilling screw, 80mm long or 2.4kN alternative fixings.
Trusses - Top plate.	Refer to truss manufacturers specification.
Top plate fixing @ 600crs for Walls & Lintels supporting roof members.	2 / 90x3.15 end nails + 2 wire dogs or 4.7kN alternative fixings or as specified in Rigid Air Barrier Spec.

GENERAL SPECIFICATION NOTES:

All construction to comply with the current NZBC, NZS 3604:2011, NZ Metal Roof & Wall Cladding COP, Manufacturers specifications, Other standards where relevant and the local territorial authority requirements.

Do not scale from these drawings.
- All timber to be SG8 unless noted otherwise.
- Allow for DPC separation between all timber and concrete.
- All sheltered Wall and Roof framing to be H1.2 treated.
- Timber cavity battens to be H3.1 treated.
- Radiata Pine Timber reveals to be H3 treated.
- All External finishing timbers to be H3.1 treated and sealed with a protective paint finish.
- Fibre cement external linings to have a protective paint finish.

Where timber members are built up to achieve required thickness eg (2/140x45 to achieve 140x90mm member), they shall be nailed in accordance with NZS3604:2011 2.4.4.7.

All Steel flashings to be 0.55mm Factory Painted Steel. Proprietary Cladding systems with specialized flashings as specified by manufacturer to suit the project corrosion zone as noted on drawings

NOTE : Impervious paint finish must be a quality paint system suitable for the material & environment of use, manufacturers specifications must be followed. Where a protective paint finish is required all surfaces including laps and end grains to be sealed by priming, followed by 2 coats of exterior grade paint to all exposed surfaces.

ROOF STRUCTURE :
Allow for 0.40mm Corrugated Factory Painted Steel roofing on roofing underlay on 70x45mm Purlins @ 900crs max (with end crs of no more than 600mm) on Manufactured Trusses. All roof flashings to be 0.55mm Factory Painted Steel, Colour matched to roof cladding with all softedge pressed to roof profile.

CEILING STRUCTURE :
Allow for 10mm std GIB board linings with R3.6 Glass batt insulation on Direct Fixed GIB Rondo System @ 450crs, Rondo battens to be direct fixed to truss bottom chord with #6 Gib Grabber Scavenger head self tapping screws OR Alternatively pairs of min 45mm x 2.8mm FH nails, with 30mm penetration to truss. Wet areas (Bathroom & Ensuite) to have Aqua GIB linings. All linings to be fixed in accordance with latest Gib technical literature.

GUTTER, FASCIA & SOFFIT :
Allow for Factory Painted Steel downpipes, gutters & fascias. External gutters to be installed to ensure any overflow spills to the outside of the building. Soffit linings to be 4.5min fibre cement board to AS/NZS 2908:Part 2 with Jointers on soffit bearers @ 1200crs max.

WALL STRUCTURE / CLADDINGS :
Allow for Linea weatherboard cladding (Nogs @ 800crs max) over 20nom cavity over 8mm IBS RigidRAP Rigid air barrier on 90x45mm timber studs @ 600crs with R2.6 Glass batt insulation. Allow for 140x35 over 90x45 top plates. Allow for 90x45mm timber studs @ 600crs for internal walls. Allow for DPC Separation between bottom plates and concrete. Insulation not required to Garage space external walls (Excluded from thermal envelope), Insulate garage internal walls with R2.6 Glass batt insulation as specified on floor plan.

Notes: Pipes and services are not permitted to be run within cladding cavities other than passing directly through the cavity to the exterior. Allow for air barrier to Gable ends.

WALL LININGS :
Refer to Inclusion for wall lining requirements.

EXTERNAL WINDOW & DOOR JOINERY :
All joinery to be double glazed Aluminium Joinery unless noted otherwise. Garage Joinery may be Single Glazed.

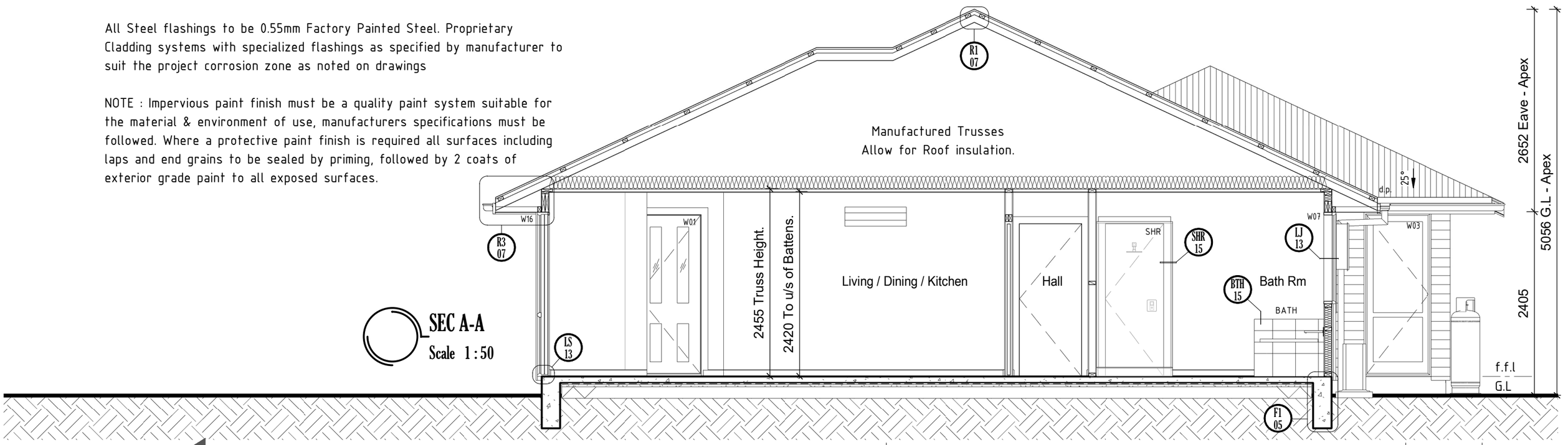

SEC A-A
Scale 1 : 50

COPYRIGHT: This drawing remains the property of Trident Homes NZ Ltd and may not be used or reproduced in whole or in part without written permission.

TRIDENTHOMES®
CHRISTCHURCH NORTH

Project : PROPOSED NEW DWELLING for Client : Wendy & Steven Olliver Address : 4 Pukeko Way, Amberley	JOB # : 4_Pukeko	Drw Name : SECTION			Builder.	Client.
	Drawn By : LBP 113870	DATE : NOV 2020	NOTE : do not scale from this drawing.	SCALE @ A3 Sht. 1 : 50	REV # E	DRW # 11

3/02/2021 2:17:29 pm

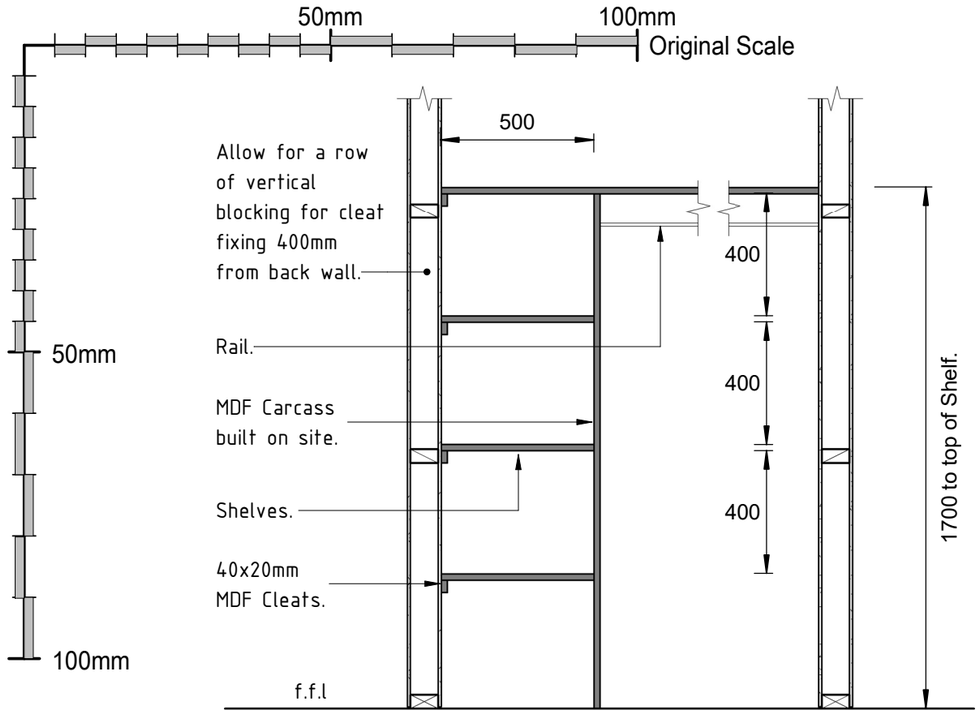

WARDROBE STORAGE UNIT
Scale 1 : 20

NOTES:
1) Allow for Skirting to face edge of shelving.
2) Allow for Shelving and rail as detailed to all wardrobes, Allow for four shelves only to Hot Water & Storage Cupboards.

ACCESS ROUTE SLIP RESISTANCE.

Allow for a finish to outdoor access routes ie Driveway, Decks & Paths leading to main entrance of dwelling as listed below.
NOTE: Where the surface of an access route is subject to wetting the surface shall have a cross fall of no less than 1 in 100 unless it is constructed to drain water such as timber decking. The surface of any access route shall not have a cross fall steeper than 1:50. Allow for 190 max height from external ground level / walking surface to dwelling f.f.l. adjacent to dwelling access route.

1) Uncoated Profiled timber run adjacent to direction of travel (Allow for coated and sand/grit impregnated for stairs or sloping surfaces subject to wetting).
2) Portland Cement Concrete with a Broomed (Class 5 or 6 complying with NZS 3114), Wood float finish (Class U2), a Coated and sand/grit impregnated finish, Exposed crushed aggregate finish or Exposed rounded aggregate finish (To be tested for compliance) OR
3) Asphaltic Concrete, Marble & Granite with flamed surface, Sandstone or Concrete pavers (Test required for surfaces subject to wetting) OR
4) Other Code compliant finish to D1/AS1 2.0 Access Routes.
NOTE: Finishes above cover Sloping surfaces < 1:10 slope for wet or 1:8 for dry conditions, refer to AS 4586 Appendix F for slip classification for walking surfaces for other slopes.

G8 ARTIFICIAL LIGHT

Allow for lighting on access routes (The continuous route between the Entrance of the building to spaces within the building) with a minimum illuminance of 20 lux, refer to Table 1 G8/AS1 for the total wattage required per m^2 of floor area for Specific Luminaire Types. All electrical work to NZECP 51.
Notes:
1) Incandescent lights with a general diffusing enclosure spaced to achieve $15W/m^2$ will achieve 20 lux for Corridors.
2) Downlights and other luminaires with concentrated or narrow beam distribution, require particular care with spacing, if minimum illuminance criteria are to be met.
3) Downlights to be IC-F, IC, CA-80 or CA-135 rated as specified in AS/NZS 60598.2.2. & Installed to AS/NZS 60598.2.2
4) Allow for an external lighting fixture located to provide adequate lighting to access routes.

FLOOR COVERINGS KEY

No Finish.

Carpet.

Vinyl.

Refer to manufacturers information for installation.

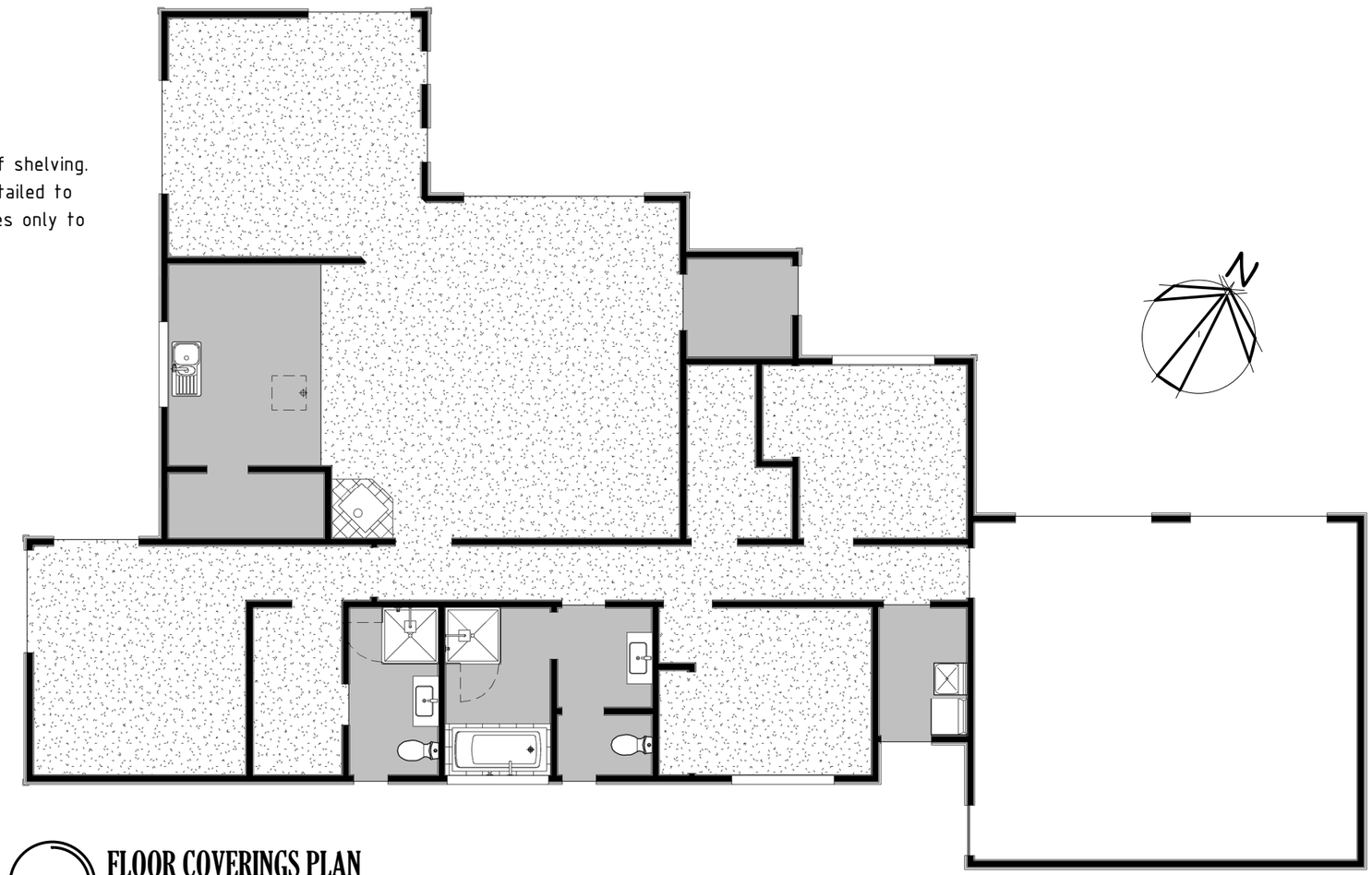

FLOOR COVERINGS PLAN
Scale 1 : 100

COPYRIGHT: This drawing remains the property of Trident Homes NZ Ltd and may not be used or reproduced in whole or in part without written permission.

TRIDENTHOMES®
CHRISTCHURCH NORTH

Project : PROPOSED NEW DWELLING for Client : Wendy & Steven Olliver Address : 4 Pukeko Way, Amberley	JOB # : 4_Pukeko	Drw Name : FLOOR COVERINGS PLAN			Builder.	Client.
	Drawn By : LBP 113870	DATE : NOV 2020	NOTE : do not scale from this drawing.	SCALE @ A3 Sht. As indicated	REV # E	DRW # 16

3/02/2021 2:17:32 pm

[redacted]

Barry Fairburn
CONSULTING ENGINEER

LMM INVESTMENTS 2012 LIMITED

SUBDIVISION OF 47 DOUBLE CORNER ROOAD - AMBERLEY

STORMWATER MANAGEMENT PLAN

Date: January 2015

Revision 0

6 GODLEY QUAY
LYTTELTON
CHRISTCHURCH 8082
NEW ZEALAND

TELEPHONE (03) 328 7364
MOBILE 027 619 5037
FAX (03) 328 7364
Email: fairburn.b@xtra.co.nz

LMM INVESTMENTS 2012LIMITED
SUBDIVISION OF 47 DOUBLE CORNER ROAD
AMBERLEY

STORMWATER MANAGEMENT PLAN

1. PURPOSE OF THE PLAN

This Stormwater Management Plan (The Plan) seeks to comply with Conditions 15 b), 17 and 18 of Subdivision Consent RC140160, which apply the complete subdivision, plus the following conditions for the separate stages:

- Conditions 30 to 37, which apply to Stage 1.
- Conditions 62 to 66, which apply to Stage 2.
- Conditions 84 to 87, which apply to Stage 3.
- Conditions 104 and 105, which apply to Stage 4.

Condition 62 requires that an overland flow path be created across Lot 26, to transfer the stormwater flow from extreme storm events (more severe than a 2% AEP / 24-hour event) from the adjacent right of way to Double Corner Road. This will be achieved by constructing a swale along the boundary of Lot 26, of the same profile as the swale along the right of way. This swale will be protected by easement in favour of the owners of Lots 25 to 29.

Specifically, Condition 15 b) requires that The Plan should demonstrate how the requirements of Ecan Global Consent CRC082988 will be met, including soakage investigation results for all proposed road and right of way soak pit locations.

1.1 Compliance with Global Consent CRC082988

A copy of Global Consent CRC082988 is contained in Appendix A.

The proposed method of stormwater discharge from the subdivision is to the ground, within the subdivision area.

The stormwater system design complies with Conditions 13 and 14 and the discharges to ground comply with Conditions 15 and 16.

The stormwater systems will be maintained in accordance with this Stormwater Management Plan, which complies with Conditions 21 and 22. Particularly, the treatment swales will be maintained in accordance with Condition 22, as described in Section 6.1 below.

1.2 Soakage investigation results

Revision 1 of an application to the HDC for a permit to discharge stormwater to the ground, in accordance with Global Consent CRC082988, is contained in Appendix B. Note: The revision was required to meet the Conditions of HDC Consent 140160. Section 2 of this document contains detailed information regarding the soakage testing undertaken and the soakage test results.

In summary, the soil profiles comprise a soil / silt layer not less than 950mm deep over a sandy gravel drainage layer with groundwater level not less than 3.0 m below ground and soakage testing demonstrated that the sandy gravel layer provides a high level of hydraulic conductivity.

The testing results were discussed at a pre-application meeting held 5 September 2014, at which it was agreed that a conservative soakage rate of 400mm/hour may be adopted universally across the site.

1.3 Soak pit locations

The road and right of way soak pits are shown on the Survus Consultant road plans provided. The locations were chosen to ensure that the length of road served by each soak pit will not exceed the maximum length calculated (on the spreadsheets in Appendix B) to equate to the soak pit capacity.

2. THE GUIDING PRINCIPLES OF STORMWATER MANAGEMENT

The three main purposes of the Stormwater Management Plan are:

- To identify the need for operational and maintenance (O&M) activities.
- To specify a range of operational and maintenance tasks needed for the stormwater disposal facilities to fulfill their purpose.
- To comply with the relevant conditions of the subdivision consent and stormwater discharge permits, as discussed above.

The prime objectives to be achieved through the application of The Plan are:

- The facilities will function as the designer intended.
- The adopted O&M procedures are sustainable, efficient and cost effective.
- The assets are maintained in good condition in perpetuity.
- All work is done in accordance with current NZ legislation, particularly the Health and Safety in Employment Act: 1993.

3. SUPPORTING DOCUMENTATION

This Plan shall be read in conjunction with:

- Ecan Global Consent CRC082988 (contained in Appendix A).
- Revision 1 of an application to the HDC for a permit to discharge stormwater to ground, in accordance with Global Consent CRC082988 (contained in Appendix B).
- The Sediment and Erosion and Dust Management Plan (contained in Appendix C).

- HDC Consent RC140160 (contained in Appendix D).

4. DESCRIPTION OF THE STORMWATER SYSTEMS

The stormwater systems to be provided to serve the subdivision are as follows:

The stormwater facilities on the roads and rights of way comprise:

- Treatment swales.
- Submerged entry sumps
- Soak pits.

The stormwater facilities on the allotments of the subdivision comprise:

- Sealed drains.
- Rock-filled soak pits.
- Overflow channels.
- Vegetated filter strips.

5. THE CONSTRUCTION PHASE

5.1 The Subdivision Development

The Plan will be issued to the construction contractor, with the status of a contract document i.e. enforceable by the engineer.

Regarding stormwater issues, the following aspects of the work are critical:

5.1.1 Grass strike

Until a grass strike has been achieved on the berms and swales of the roads and rights of way, there will be no stormwater treatment and there is a high risk of the release of silty water. Thus, every effort shall be made to achieve a satisfactory grass strike in the minimum timeframe

5.1.2 The protection of soak pits

Until a satisfactory grass strike has been achieved on the berms and swales of the roads and rights of way, there is a significant risk of a release of silty water entering completed soak pits, which could cause blockages. It will be specified that all completed soak pits must be protected against the ingress of silty water, until a satisfactory grass strike has been achieved, by using silt fences, or other approved means.

5.1.3 Depth of soak pits

To comply with Global Consent 082988 Condition 16(A)v, we need to maintain a separation distance of not less than 1.0 m between the base of a soak pit and highest groundwater level, which generally equates to a maximum effective soak pit depth of not more than 1.5m. This will be the standard case. But, in some locations, the sandy gravel drainage layer may not have been penetrated at an effective depth of 1.5m, in which case, the soak pit will be increased in depth, so that it penetrates the drainage layer by not less than 300mm i.e. it is a requirement that ALL soak pits, serving roads, rights of way and residential sites, penetrate the sandy gravel drainage layer by not less than 300mm.

5.1.4 Inspections following rainfall

The maximum risk to incomplete stormwater systems occurs following heavy rainfall. The contractor will be required to put systems in place that will ensure that if a storm occurs outside working hours appropriate staff, with adequate resources, will undertake inspections of vulnerable work areas and rectify any problems that have occurred.

5.2 Housing construction

Lot purchasers will be required to engage builders who will manage stormwater issues, in accordance with the Environment Canterbury booklet: *Erosion and Sediment Control for Small Sites*.

6. FUTURE MAINTENANCE

Records of the maintenance of the stormwater disposal systems serving the roads and rights of way shall be kept, including all maintenance activities undertaken. Copies of these records shall be made available to the Hurunui District Council, upon request.

6.1 Routine maintenance of swales

The minimum standard of maintenance of the swales along the roads and rights of way is governed by Condition 22 of Ecan Global Consent CRC082988 and the provisions of this Plan.

The standard of maintenance shall be such that the vegetation and/or grass is in a healthy and uniform state, with the exception of seasonal browning off in the summer or autumn.

The routine maintenance tasks shall be as follows:

- Swales are to be inspected at least every six-months, when all visible hydrocarbons, litter, debris and accumulated sediment shall be removed. Note: Any hydrocarbons are to be removed to a facility authorized to receive such material.
- Any scouring, erosion or permanent die-off, which has resulted in bare or patchy soil cover, is to be replanted within two weeks of the inspection, subject to weather and seasonal conditions.
- Where grass is mown, the grass length is to be maintained between 40 mm and 150 mm. All cut grass shall be removed.

6.2 Routine maintenance of sumps

- Sumps are to be inspected at least every six-months, when all visible hydrocarbons, litter, debris and accumulated sediment, within the vicinity of the sumps, shall be removed. Note: Any hydrocarbons are to be removed to a facility authorized to receive such material.

- As part of the inspections, sumps shall be opened and detritus removed. The entry and outlet pipes are to be checked to ensure that they are not blocked. Any blockages are to be rectified immediately.

6.3 Routine maintenance of soak pits on the roads and rights of way

- Soak pits are to be inspected at least every six-months, when all visible, surface hydrocarbons, litter, debris and accumulated sediment shall be removed. Any evidence that a soak pit is failing is to be noted, such as the ponding of water or signs (such as dead grass) that ponding has occurred after rainfall shall be investigated and rectified.
- As part of the inspections, the inspection lid shall be opened and an inspection made of the perforated distribution pipe, using a powerful torch. Any damage or blockages are to be rectified immediately.
- If an inspection reveals that remedial work is required, to avoid potential failure, such as the excavation and replacement of rock fill, it is to be carried out within twenty-days of the inspection. In extreme cases, soak pits may need to be completely replaced.

6.4 Routine maintenance of stormwater systems on the allotments

The lot owners will be the consent holders and operators of the on-site stormwater systems, in accordance with the subdivision consent conditions, and are required to comply with the appropriate provisions of this Plan.

- Allotments on Stage 1 of the subdivision need to comply with Condition 36 a), b), c) and d).
- Allotments on Stage 2 of the subdivision need to comply with Condition 65 a), b), c) and d).
- Allotments on Stage 3 of the subdivision need to comply with Condition 86 a), b), c) and d).
- Allotments on Stage 4 of the subdivision need to comply with Condition 104 a), b), c) and d).

Appendix B provides design information, based upon the use of a rock-filled sock pit.

The specific routine maintenance tasks required for on-site stormwater systems are as follows:

- The house drains are to be inspected at least every six-months, including opening all inspection chambers. Any evidence that the stormwater system is failing or blocked, such as the back-up of water in the drains, is to be investigated and rectified.
- Soak pits are to be inspected at least every six-months, when all visible, surface hydrocarbons, litter, debris and accumulated sediment shall be removed. Any evidence that a soak pit is failing, such as the ponding of water or signs (such as dead grass) that ponding has occurred after rainfall shall be investigated and rectified. If an inspection reveals that remedial work is required, to avoid potential failure, such as the excavation and replacement of rock fill, it is to be carried out within twenty-

Lots 38 and 40 need to comply with Condition 84, for rights of way V - W.

When each allotment is sold, stormwater maintenance responsibility passes to the new owner, in accordance with a consent notice on the title. Stormwater maintenance responsibility for all unsold allotments is held by the subdivision consent holder, whose contact information is:

Mr Ross Moffatt
LMM Investments 2012 Limited
80 Jacksons Road
RD 2
KAIAPOI 7692
Business Phone: 021 312 244
Ross.moffatt@xtra.co.nz

Barry Fairburn

January 2015

days of the inspection. In extreme cases, soak pits may need to be completely replaced.

- The overflow channel required by the relevant consent condition shall comprise a swale from the soak pit to the road frontage, as described Appendix B. The channel shall be mown, if grass covered, or well tended if vegetated, to ensure the capacity of the channel is not reduced below the design requirement.
- Stormwater discharged from hardstand areas on the allotments will be to ground via vegetated filter strips or submerged entry sumps, as required by the consent conditions. Any filter strips shall slope gently away from the edges of trafficable hardstand areas, and be not less than 2m wide. The filter strips shall be mown, if grass covered, or well tended if vegetated.

6.5 Non-routine maintenance

From time to time there may be a need to undertake unprogramed work due to unforeseen circumstances such as an accidental spillage.

In the event of a spillage of fuel or any other hazardous liquid, a clean-up may be necessary, which, depending on the severity, may need to be coordinated with HDC and/or the fire service and, if there is a risk of environmental damage, Ecan should be informed.

7. MAINTENANCE RESPONSIBILITY

7.1 Stormwater systems serving roads

On the completion of the subdivision and the expiry of the contractor's periods of defects liability, the operation and maintenance of the roads, including the stormwater systems, will be vested in the HDC, who will be responsible for all maintenance activities and compliance with relevant parts of this Plan.

7.2 Stormwater systems serving rights of way

The responsibility for maintenance of the stormwater systems serving the rights of way is set out in the Conditions of Consent RC140160, as follows:

STAGE 1

Lots 1 – 7 need to comply with Condition 30, for rights of way A - G.

Lots 10 – 15 need to comply with Condition 32, for rights of way H - M.

Lot 21 needs to comply with Condition 34, for rights of way N - O.

STAGE 2

Lots 25 – 29 need to comply with Condition 63, for rights of way N and P – U.

STAGE 3

Water Supply

- Rural Main
- Rural Sub Main
- Urban Main
- Urban Service Connection

Water Supply Points

- Toby
- Valve less than or equal to 50mm

Sewer

- Pressure Main

Waste Water Points

- Other

Stormwater

- Lateral
- Open Drain
- Swale
- Overland Flow Path

Stormwater Points

- Soak Pit
- Sump - Entry

Other

- Parcel
- Assessment Boundary
- Urban Boundary



Three Waters

200465 - PIM - Utilities Service Plan

Hurunui District Council does not guarantee that the data in this map is without flaw of any kind and disclaims all liability for any errors, loss or other consequences which may arise from relying on any information depicted. Cadastral and topographic data sourced from LINZ. Crown Copyright Reserved.

Date:	4/12/2020
Scale:	1:564
Print Size:	A4 Landscape
Projection:	NZTM
Produced by:	

N

HURUNUI District Council

GST Reg No 53-915-477
Received with thanks by 44/01
Hurunui District Council

25-02-21 11:28 *COPY COPY*689891

DR BC200465 OLLIVER S -2,500.00
S Olliver::19 South Crescent:RD 1:Amber
CQ EFT CHC
S Olliver 2,500.00
Total Receipted 2,500.00

ACCESSWAY CONSTRUCTION BC
BUILDING CONSENT BC2004

BY THIS BOND made the 25 day of Feb 2021 ~~2020~~

BETWEEN the Hurunui District Council (called "the Council") of the one part

AND Steven and Wendy Olliver (the "Owner(s)") 4 Pukeko Way, Amberley (with his/her/their successors and assigns called "the Owner(s)")

BACKGROUND:

A. The Owner(s) wishes to undertake building works on the property situated at 4 Pukeko Way, Amberley, legal description – Lot 25 DP 488914 (hereinafter called "the Land").

B. The Council's District Plan for the Land provides that the creation of any new vehicle crossing, or the use of an existing vehicle crossing for a new activity, (including the relocation of such) shall meet the standards of Rule 8.4.2 of the Hurunui District Plan. In this instance the vehicle crossing specifications are set out in the Consent Notice registered to the Record of Title

C. The Applicant has applied for a building consent (BC200465) under the Building Act 2004. The proposed activity complies in all other aspects with District Plan requirements with the exception of the vehicle crossing formation and construction. In order for the Council to issue a Building Consent for a permitted activity, the Owner agrees to provide a Bond to secure the carrying out of the vehicle crossing construction. The construction of the vehicle crossing shall be undertaken within 12 months of the bond being entered into or before the use of the proposed activity commences, whichever is the lesser.

D. The estimated cost of the construction and formation of the vehicle crossing to the required standard under the Consent Notice is estimated to be the sum of $2500.

CONDITIONS OF BOND:

Urban Vehicle Crossing
A vehicle crossing shall be provided to the Land in accordance with a formed in accordance with DD-01 Vehicle Crossing Details "Crossing type B" to the Consent Notice registered to the Land's Certificate of Title.

Notes:

1. *District Plan rules set out the location and sight distance requirements.*
2. *The Bond will not be deemed to be given effect to until the accessway is dug out and inspected by the Council's engineer. As such, the hold will remain on the consent until this time.*
3. *Note that anyone working in the road reserve will first need to obtain a Corridor Access permit from Council via the beforeUdig service (online at beforeUdig.co.nz or by phone at 0800 248 344).*

THIS AGREEMENT RECORDS:

1. The Owner(s) has deposited with the Council the sum of **$2500** as surety for this Bond and agree that the Council may hold the said sum of money until the conditions of this Bond have been fully met or the moneys shall have otherwise been disbursed in accordance with the terms of this Agreement.

2. The Owners acknowledges that the following vehicle crossing inspection is compulsory and the owner is required to give the Councils engineer 48 hours' notice prior to any inspection.

   - Final

3. The Owner(s) shall complete the Work to the reasonable satisfaction of the Council within 12 months of the date of this bond or within such longer period as the Council may approve.

4. The sum deposited with the Council includes a non-refundable fee of $525 for administration and inspection costs incidental to the preparation and release of this Bond.

5. The Owner(s) acknowledges that their liability under this Agreement shall not be released, varied or affected in any way by any delay, extension of time, or other indulgence suffered or permitted by the Council or by any failure or neglect by the Council to enforce the terms of this Agreement.

   5.1 If the Owner(s) shall be in breach of any of the obligations under this Agreement, it shall be lawful for the Council, at the sole option of the Council to arrange for the satisfactory completion of all of the works and for this purpose the Council may employ its servants or agents or such contractors as the Council may see fit.

   5.2 The Owner(s) shall pay all costs incurred by the Council in arranging for the completion of those works and the Owner(s) shall be liable for any sum so expended by the Council or any expenses incurred by the Council in excess of the sum bonded.

   5.3 The Council may apply the moneys deposited with the Council towards payment of all such costs and expenses and in the event that the sum deposited with the Council is not sufficient to carry out the said works the Council may recover any excess from the Owner as a liquidated debt.

   5.4 In the event that costs and expenses incurred by the Council for the formation of the vehicle crossing are less than that sum deposited with the Council then the Owners shall be entitled to the repayment of the balance in accordance with the provisions in Clause 5.

6. Upon completion of the work being competed to the reasonable satisfaction of the Council in accordance with the Consent Notice the Owner(s) shall be entitled to repayment to them of the moneys deposited with the Council but without any entitlement to interest and any of the costs payable under clause 5 of this bond.

7. In the event of the Owner not proceeding with the building works then the sum bonded will be refunded to them in accordance with Clause 5.

8. The Owner(s) shall pay any costs and disbursements incurred by the Council for additional inspections and in the enforcement by the Council of any of its rights under this Agreement.

9. If there is dispute between the parties arising out of, or in connection with, this bond, neither of the parties is to commence any proceedings relating to that dispute until the following procedure had been complied with:

   9.1 The party claiming a dispute has arisen must give written notice to the other party specifying the nature of the dispute.

   9.2 The parties will endeavour, in good faith to resolve the dispute referred to in the notice by using informal dispute resolution techniques.

   9.3 If the parties do not agree on a dispute resolution technique within 14 days after the date notice of a dispute was given, the dispute is to be mediated according to the standard Bond of LEADR New Zealand Incorporated (Lawyers Engaged in Alternative Dispute Resolution), and the Chair of LEADR (or the Chair's nominee) will select the mediator and determine the mediator's remuneration.

   9.4 A party seeking urgent interlocutory relief may, by notice to the other party, elect not to comply with the provisions of this clause, but only to the extent of the relief sought, and only for the period required to dispose of the application for interlocutory.

   9.5 Pending resolution of the dispute, this Bond will remain in full effect without prejudicing the parties' respective rights and remedies.

SIGNED by

_____ and _____

Wendy Olliver

in the presence of:

_____

Name of Witness

Nicole Hurinui

Signature of Witness

_____

Address of Witness

33 Glenmark Drive, Waipara

Occupation of Witness

Custaur Support - HDC

GST Reg No 53-915-477
Received with thanks by 44/01
Hurunui District Council

25-02-21 11:28 *COPY COPY*689891

DR BC200465 OLLIVER S -2,500.00
S Olliver::19 South Crescent:RD 1:Amber
CQ EFT CHC
S Olliver 2,500.00
Total Receipted 2,500.00

ACCESSWAY CONSTRUCTION BC
BUILDING CONSENT BC2004

BY THIS BOND made the 25 day of Feb 2021 ~~2020~~

BETWEEN the Hurunui District Council (called "the Council") of the one part

AND Steven and Wendy Olliver (the "Owner(s)") 4 Pukeko Way, Amberley (with his/her/their successors and assigns called "the Owner(s)")

BACKGROUND:

A. The Owner(s) wishes to undertake building works on the property situated at 4 Pukeko Way, Amberley, legal description – Lot 25 DP 488914 (hereinafter called "the Land").

B. The Council's District Plan for the Land provides that the creation of any new vehicle crossing, or the use of an existing vehicle crossing for a new activity, (including the relocation of such) shall meet the standards of Rule 8.4.2 of the Hurunui District Plan. In this instance the vehicle crossing specifications are set out in the Consent Notice registered to the Record of Title

C. The Applicant has applied for a building consent (BC200465) under the Building Act 2004. The proposed activity complies in all other aspects with District Plan requirements with the exception of the vehicle crossing formation and construction. In order for the Council to issue a Building Consent for a permitted activity, the Owner agrees to provide a Bond to secure the carrying out of the vehicle crossing construction. The construction of the vehicle crossing shall be undertaken within 12 months of the bond being entered into or before the use of the proposed activity commences, whichever is the lesser.

D. The estimated cost of the construction and formation of the vehicle crossing to the required standard under the Consent Notice is estimated to be the sum of $2500.

CONDITIONS OF BOND:

Urban Vehicle Crossing
A vehicle crossing shall be provided to the Land in accordance with a formed in accordance with DD-01 Vehicle Crossing Details "Crossing type B" to the Consent Notice registered to the Land's Certificate of Title.

Notes:

1. *District Plan rules set out the location and sight distance requirements.*
2. *The Bond will not be deemed to be given effect to until the accessway is dug out and inspected by the Council's engineer. As such, the hold will remain on the consent until this time.*
3. *Note that anyone working in the road reserve will first need to obtain a Corridor Access permit from Council via the beforeUdig service (online at beforeUdig.co.nz or by phone at 0800 248 344).*

THIS AGREEMENT RECORDS:

1. The Owner(s) has deposited with the Council the sum of **$2500** as surety for this Bond and agree that the Council may hold the said sum of money until the conditions of this Bond have been fully met or the moneys shall have otherwise been disbursed in accordance with the terms of this Agreement.

2. The Owners acknowledges that the following vehicle crossing inspection is compulsory and the owner is required to give the Councils engineer 48 hours' notice prior to any inspection.

   - Final

3. The Owner(s) shall complete the Work to the reasonable satisfaction of the Council within 12 months of the date of this bond or within such longer period as the Council may approve.

4. The sum deposited with the Council includes a non-refundable fee of $525 for administration and inspection costs incidental to the preparation and release of this Bond.

5. The Owner(s) acknowledges that their liability under this Agreement shall not be released, varied or affected in any way by any delay, extension of time, or other indulgence suffered or permitted by the Council or by any failure or neglect by the Council to enforce the terms of this Agreement.

   5.1 If the Owner(s) shall be in breach of any of the obligations under this Agreement, it shall be lawful for the Council, at the sole option of the Council to arrange for the satisfactory completion of all of the works and for this purpose the Council may employ its servants or agents or such contractors as the Council may see fit.

   5.2 The Owner(s) shall pay all costs incurred by the Council in arranging for the completion of those works and the Owner(s) shall be liable for any sum so expended by the Council or any expenses incurred by the Council in excess of the sum bonded.

   5.3 The Council may apply the moneys deposited with the Council towards payment of all such costs and expenses and in the event that the sum deposited with the Council is not sufficient to carry out the said works the Council may recover any excess from the Owner as a liquidated debt.

   5.4 In the event that costs and expenses incurred by the Council for the formation of the vehicle crossing are less than that sum deposited with the Council then the Owners shall be entitled to the repayment of the balance in accordance with the provisions in Clause 5.

6. Upon completion of the work being competed to the reasonable satisfaction of the Council in accordance with the Consent Notice the Owner(s) shall be entitled to repayment to them of the moneys deposited with the Council but without any entitlement to interest and any of the costs payable under clause 5 of this bond.

7. In the event of the Owner not proceeding with the building works then the sum bonded will be refunded to them in accordance with Clause 5.

8. The Owner(s) shall pay any costs and disbursements incurred by the Council for additional inspections and in the enforcement by the Council of any of its rights under this Agreement.

9. If there is dispute between the parties arising out of, or in connection with, this bond, neither of the parties is to commence any proceedings relating to that dispute until the following procedure had been complied with:

   9.1 The party claiming a dispute has arisen must give written notice to the other party specifying the nature of the dispute.

   9.2 The parties will endeavour, in good faith to resolve the dispute referred to in the notice by using informal dispute resolution techniques.

   9.3 If the parties do not agree on a dispute resolution technique within 14 days after the date notice of a dispute was given, the dispute is to be mediated according to the standard Bond of LEADR New Zealand Incorporated (Lawyers Engaged in Alternative Dispute Resolution), and the Chair of LEADR (or the Chair's nominee) will select the mediator and determine the mediator's remuneration.

   9.4 A party seeking urgent interlocutory relief may, by notice to the other party, elect not to comply with the provisions of this clause, but only to the extent of the relief sought, and only for the period required to dispose of the application for interlocutory.

   9.5 Pending resolution of the dispute, this Bond will remain in full effect without prejudicing the parties' respective rights and remedies.

SIGNED by

_____ and _____

Wendy Olliver

in the presence of:

_____

Name of Witness

Nicole Hurinui

Signature of Witness

_____

Address of Witness

33 Glenmark Drive, Waipara

Occupation of Witness

Custaur Support - HDC

ACCESSWAY CONSTRUCTION BOND
BUILDING CONSENT BC200465

BY THIS BOND made the _____ day of _____ 2020

BETWEEN the Hurunui District Council (called "the Council") of the one part

AND Steven and Wendy Olliver (the "Owner(s)") 4 Pukeko Way, Amberley (with his/her/their successors and assigns called "the Owner(s)")

BACKGROUND:

A. The Owner(s) wishes to undertake building works on the property situated at 4 Pukeko Way, Amberley, legal description – Lot 25 DP 488914 (hereinafter called "the Land").

B. The Council's District Plan for the Land provides that the creation of any new vehicle crossing, or the use of an existing vehicle crossing for a new activity, (including the relocation of such) shall meet the standards of Rule 8.4.2 of the Hurunui District Plan. In this instance the vehicle crossing specifications are set out in the Consent Notice registered to the Record of Title

C. The Applicant has applied for a building consent (BC200465) under the Building Act 2004. The proposed activity complies in all other aspects with District Plan requirements with the exception of the vehicle crossing formation and construction. In order for the Council to issue a Building Consent for a permitted activity, the Owner agrees to provide a Bond to secure the carrying out of the vehicle crossing construction. The construction of the vehicle crossing shall be undertaken within 12 months of the bond being entered into or before the use of the proposed activity commences, whichever is the lesser.

D. The estimated cost of the construction and formation of the vehicle crossing to the required standard under the Consent Notice is estimated to be the sum of $2500.

CONDITIONS OF BOND:

Urban Vehicle Crossing
A vehicle crossing shall be provided to the Land in accordance with a formed in accordance with DD-01 Vehicle Crossing Details ''Crossing type B'' to the Consent Notice registered to the Land's Certificate of Title.

Notes:

1. *District Plan rules set out the location and sight distance requirements.*
2. *The Bond will not be deemed to be given effect to until the accessway is dug out and inspected by the Council's engineer. As such, the hold will remain on the consent until this time.*
3. *Note that anyone working in the road reserve will first need to obtain a Corridor Access permit from Council via the beforeUdig service (online at beforeUdig.co.nz or by phone at 0800 248 344).*

THIS AGREEMENT RECORDS:

1. The Owner(s) has deposited with the Council the sum of **$2500** as surety for this Bond and agree that the Council may hold the said sum of money until the conditions of this Bond have been fully met or the moneys shall have otherwise been disbursed in accordance with the terms of this Agreement.

2. The Owners acknowledges that the following vehicle crossing inspection is compulsory and the owner is required to give the Councils engineer 48 hours' notice prior to any inspection.

   - Final

3. The Owner(s) shall complete the Work to the reasonable satisfaction of the Council within 12 months of the date of this bond or within such longer period as the Council may approve.

4. The sum deposited with the Council includes a non-refundable fee of $525 for administration and inspection costs incidental to the preparation and release of this Bond.

5. The Owner(s) acknowledges that their liability under this Agreement shall not be released, varied or affected in any way by any delay, extension of time, or other indulgence suffered or permitted by the Council or by any failure or neglect by the Council to enforce the terms of this Agreement.

   5.1 If the Owner(s) shall be in breach of any of the obligations under this Agreement, it shall be lawful for the Council, at the sole option of the Council to arrange for the satisfactory completion of all of the works and for this purpose the Council may employ its servants or agents or such contractors as the Council may see fit.

   5.2 The Owner(s) shall pay all costs incurred by the Council in arranging for the completion of those works and the Owner(s) shall be liable for any sum so expended by the Council or any expenses incurred by the Council in excess of the sum bonded.

   5.3 The Council may apply the moneys deposited with the Council towards payment of all such costs and expenses and in the event that the sum deposited with the Council is not sufficient to carry out the said works the Council may recover any excess from the Owner as a liquidated debt.

   5.4 In the event that costs and expenses incurred by the Council for the formation of the vehicle crossing are less than that sum deposited with the Council then the Owners shall be entitled to the repayment of the balance in accordance with the provisions in Clause 5.

6. Upon completion of the work being competed to the reasonable satisfaction of the Council in accordance with the Consent Notice the Owner(s) shall be entitled to repayment to them of the moneys deposited with the Council but without any entitlement to interest and any of the costs payable under clause 5 of this bond.

7. In the event of the Owner not proceeding with the building works then the sum bonded will be refunded to them in accordance with Clause 5.

8. The Owner(s) shall pay any costs and disbursements incurred by the Council for additional inspections and in the enforcement by the Council of any of its rights under this Agreement.

9. If there is dispute between the parties arising out of, or in connection with, this bond, neither of the parties is to commence any proceedings relating to that dispute until the following procedure had been complied with:

    9.1 The party claiming a dispute has arisen must give written notice to the other party specifying the nature of the dispute.

    9.2 The parties will endeavour, in good faith to resolve the dispute referred to in the notice by using informal dispute resolution techniques.

    9.3 If the parties do not agree on a dispute resolution technique within 14 days after the date notice of a dispute was given, the dispute is to be mediated according to the standard Bond of LEADR New Zealand Incorporated (Lawyers Engaged in Alternative Dispute Resolution), and the Chair of LEADR (or the Chair's nominee) will select the mediator and determine the mediator's remuneration.

    9.4 A party seeking urgent interlocutory relief may, by notice to the other party, elect not to comply with the provisions of this clause, but only to the extent of the relief sought, and only for the period required to dispose of the application for interlocutory.

    9.5 Pending resolution of the dispute, this Bond will remain in full effect without prejudicing the parties' respective rights and remedies.

SIGNED by

_____ and

_____

in the presence of:

_____
Name of Witness

_____
Signature of Witness

_____
Address of Witness

_____
Occupation of Witness

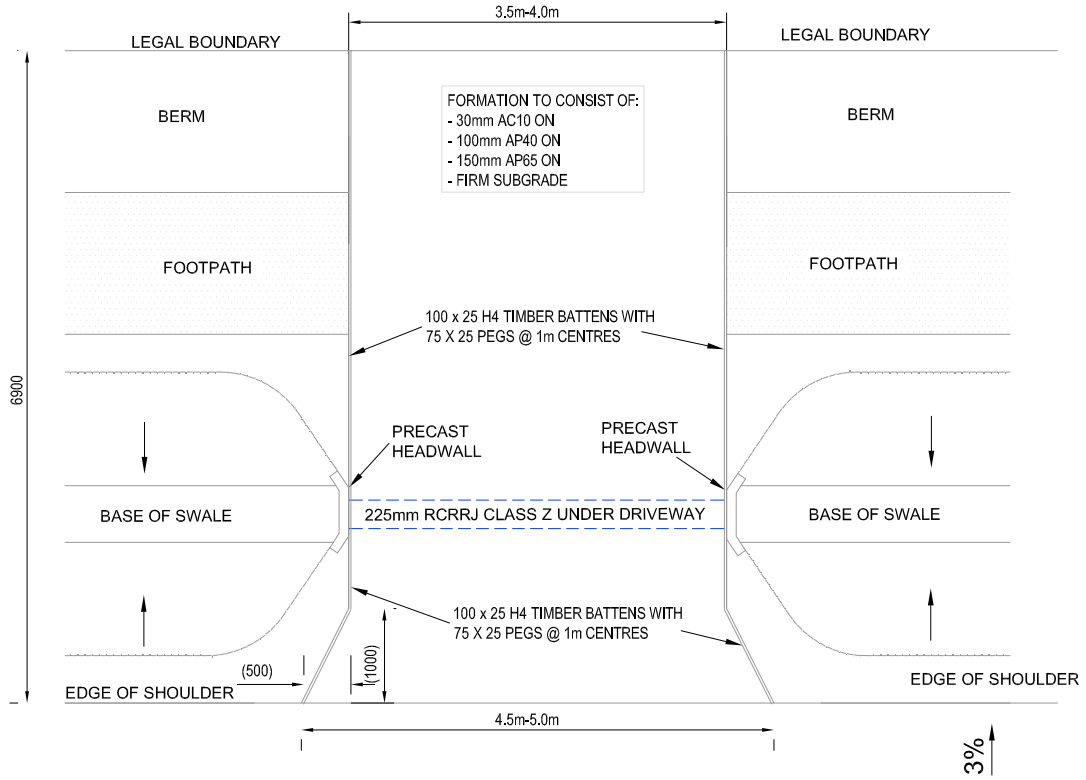

TYPICAL DRIVEWAY "A" PLAN

SCALE 1:40

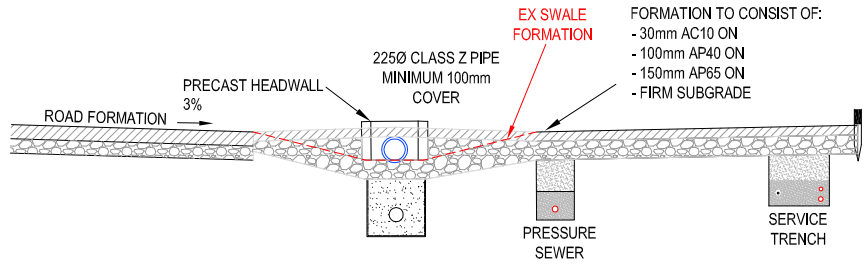

TYPICAL DRIVEWAY "A" SECTION

SCALE 1:40

Scheme Plan
Approved
14 Oct 2015
RC # :
150161
By : Sean
Crocker

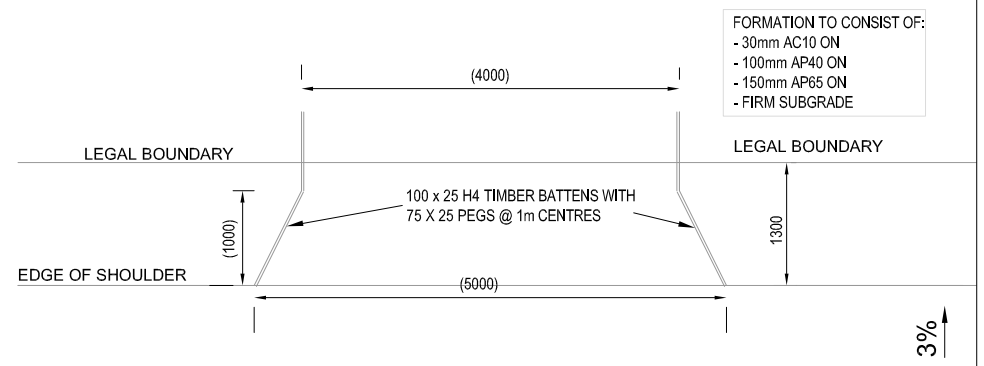

TYPICAL DRIVEWAY "C" PLAN (NO SWALE)

SCALE 1:40

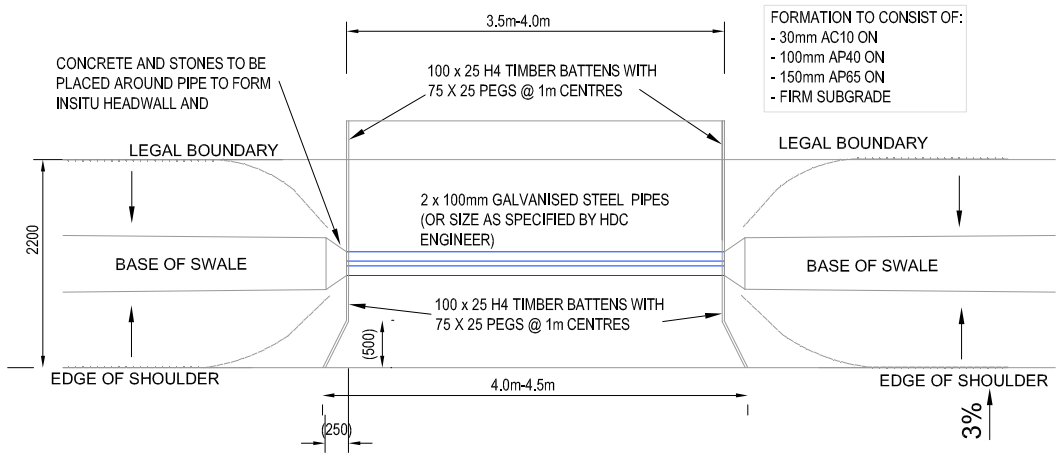

TYPICAL DRIVEWAY "B" PLAN

SCALE 1:40

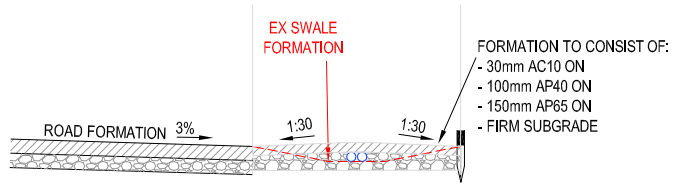

TYPICAL DRIVEWAY "B" SECTION

SCALE 1:40

SURVUS CONSULTANTS
surveying engineering property development
WWW.SURVUS.CO.NZ

4 Meadow Street, PO Box 5558, Papanui, Christchurch
P 03 352 5599 AMBERLEY 03 314 9200
F 03 352 5527 ASHBURTON 03 307 7021
TOLL FREE 0508 787 887 DARFIELD 03 318 8151

REV	DATE	REVISION DETAILS	
2	28/08/15	UPDATED DRIVEWAY B	C HURFORD
1	06/08/15	FOR CONSTRUCTION	C HURFORD
A	04/08/15	FOR CONSENT	C HURFORD

DESIGNED	VERIFIED
CWH	JC

APPROVED

C HURFORD DATE *04/08/15*

C HURFORD

PROJECT

LMM INVESTMENTS 2012 LIMITED - 57 DOUBLE CORNER ROAD

TITLE

VEHICLE CROSSING DETAILS

FOR CONSTRUCTION

PROJECT NO 11713

SCALE AS SHOWN | SIZE A1

DRAWING NO DD-01 | REV 2

HURUNUI DISTRICT COUNCIL
P.O. Box 13 | Amberley | 7441 | 66 Carters Road | Amberley | 7410
Phone 03 314-8816 | Fax 03 314-9181 | Email info@hurunui.govt.nz
Web hurunui.govt.nz | facebook.com/HurunuiDistrictCouncil
Skype hdc_customer_services | twitter.com/hurunuidc

9 December 2020

19 South Crescent,
RD 1
Amberley 7481

Dear Steven and Wendy,

BUILDING CONSENT BC200465 - VEHICLE CROSSING CONSTRUCTION

Please note that in order to promote the safe and efficient use and development of the transportation network, the District Plan has rules for vehicle access onto properties. No activity, including the construction of a dwellinghouse, can be commenced unless the property is provided with adequate site access in terms of Rule 8.4.3 of the Hurunui District Plan. In this case the specifications of the vehicle crossing are conditioned by Consent Notice registered to the Certificate of Title. The Consent Notice requires the new vehicle crossing to be formed in accordance with DD-01 Vehicle Crossing Details ''Crossing type B''.

In order for the Council to allow the building work to proceed, you have three options as follows:

1. Construct the vehicle crossing in accordance with the requirements of the Consent Notice before the Council will allow the building work to proceed. This will require you to contact the Council prior to construction commencing to arrange the required inspections. Confirmation that the vehicle crossing meets the design and construction standards of the Consent Notice will be discussed with the Consents Engineer at your pre-construction meeting. Please find attached the relevant design and construction requirements of the Consent Notice.

2. Enter into a cash bond agreement with the Council to secure compliance with the vehicle crossing standards of the Consent Notice. Once the bond agreement has been entered into, and the Council has issued the building consent, the building works may proceed. Please find attached a copy of the bond documents should you choose to enter into the bond agreement with the Council. Please complete two copies and return one copy to the Council with **$3025**. The cash bond includes a non-refundable fee of $525 for administration and inspections.

   The construction of the vehicle crossing shall be undertaken within 12 months of the bond being entered into or before the use of the proposed activity commences, whichever is the lesser. Should you complete the work in accordance with the Consent Notice, then the cash bond will be refunded less the administration and inspections fee.

3. Do nothing, in which case a certificate under section 37 of the Building Act will be attached to the Building Consent. This will require you to apply for resource consent to defer the construction of the vehicle crossing to a specified date. A resource consent application has a flat fee of $1,045.00. No building work may proceed until resource consent has been granted.

Please advise the Council at your earliest convenience as to how you wish to proceed.

Please do not hesitate to contact me should you wish to discuss the options available to you in further detail.

Yours faithfully



Hannah Shields
Planner

Encl.
Attachment 1: Vehicle crossing design and construction standards
Attachment 2: Bond documentation

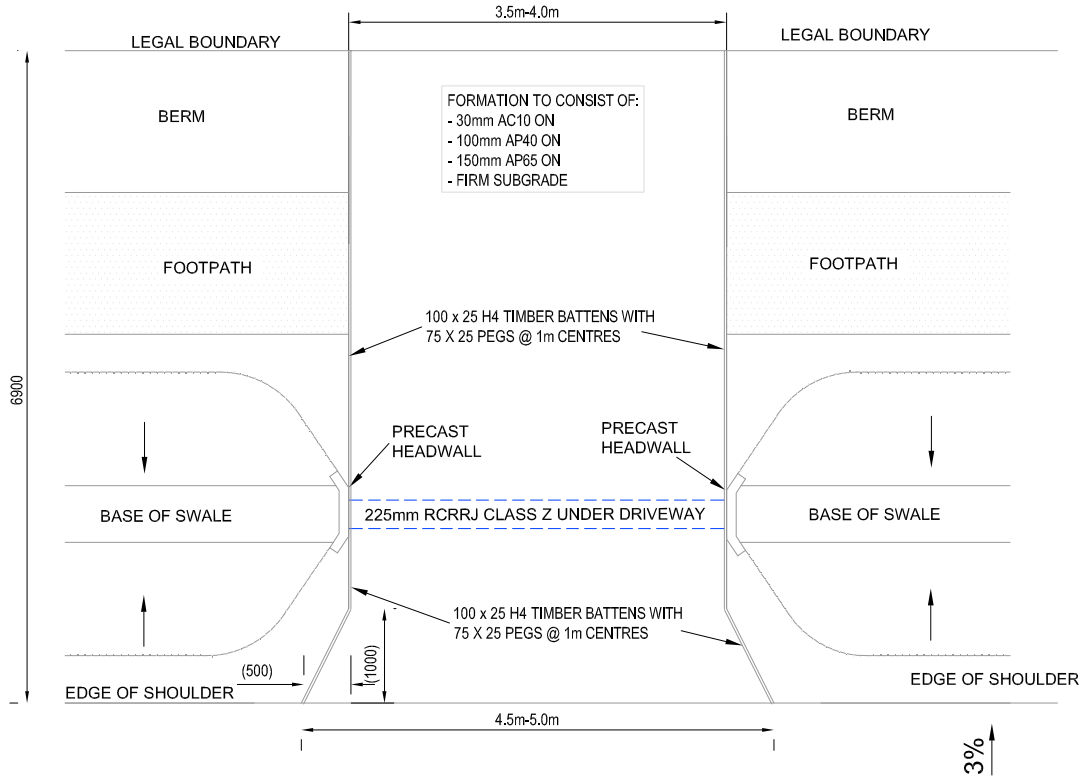

TYPICAL DRIVEWAY "A" PLAN

SCALE 1:40

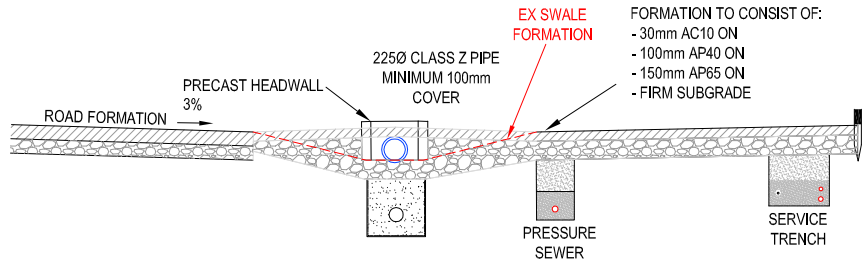

TYPICAL DRIVEWAY "A" SECTION

SCALE 1:40

Scheme Plan
Approved
14 Oct 2015
RC # :
150161
By : Sean
Crocker

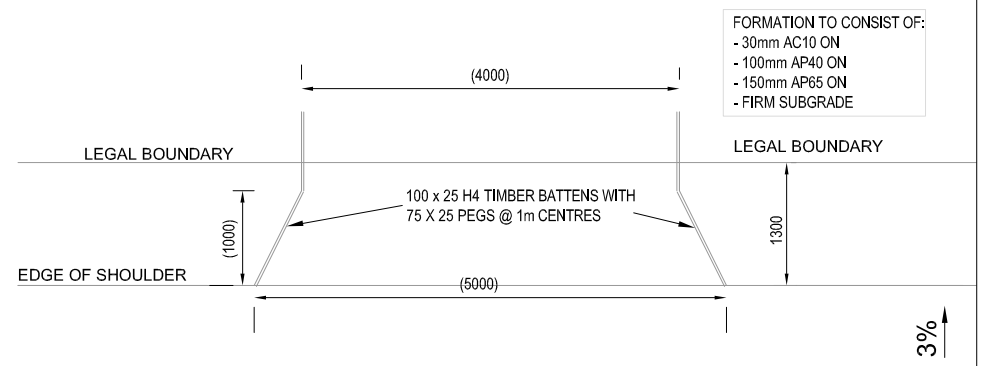

TYPICAL DRIVEWAY "C" PLAN (NO SWALE)

SCALE 1:40

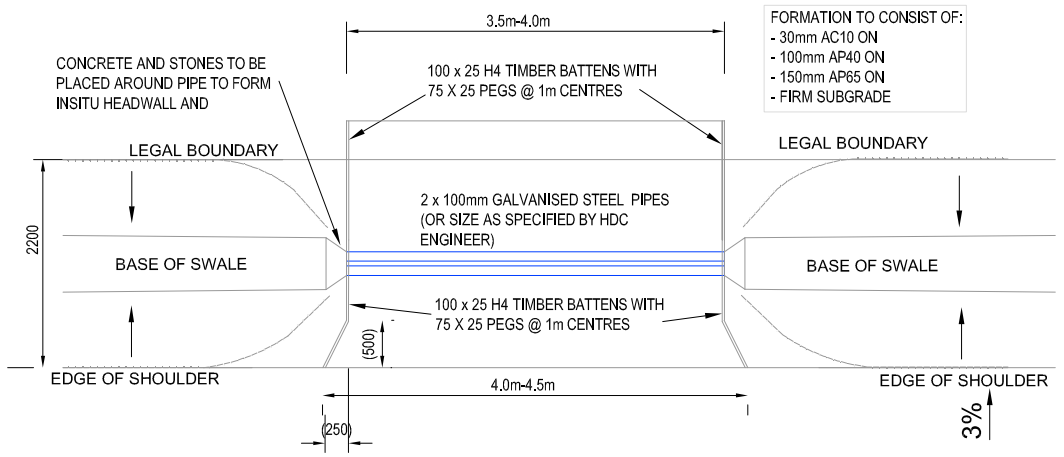

TYPICAL DRIVEWAY "B" PLAN

SCALE 1:40

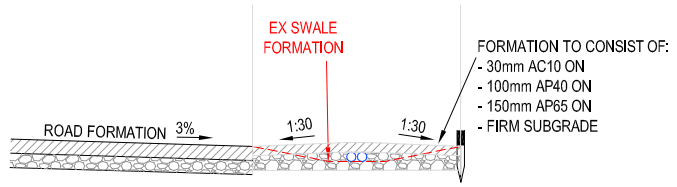

TYPICAL DRIVEWAY "B" SECTION

SCALE 1:40

SURVUS CONSULTANTS
surveying engineering property development
WWW.SURVUS.CO.NZ

4 Meadow Street, PO Box 5558, Papanui, Christchurch
P 03 352 5599 AMBERLEY 03 314 9200
F 03 352 5527 ASHBURTON 03 307 7021
TOLL FREE 0508 787 887 DARFIELD 03 318 8151

REV	DATE	REVISION DETAILS	
2	28/08/15	UPDATED DRIVEWAY B	C HURFORD
1	06/08/15	FOR CONSTRUCTION	C HURFORD
A	04/08/15	FOR CONSENT	C HURFORD

DESIGNED	VERIFIED
CWH	JC

APPROVED

C HURFORD DATE *04/08/15*

C HURFORD

PROJECT

LMM INVESTMENTS 2012 LIMITED - 57 DOUBLE CORNER ROAD

TITLE

VEHICLE CROSSING DETAILS

FOR CONSTRUCTION

PROJECT NO 11713

SCALE AS SHOWN | SIZE A1

DRAWING NO DD-01 | REV 2

Attachment 2: Bond documentation

ACCESSWAY CONSTRUCTION BOND
BUILDING CONSENT BC200465

BY THIS BOND made the _____ day of _____ 2020

BETWEEN the Hurunui District Council (called "the Council") of the one part

AND Steven and Wendy Olliver (the "Owner(s)") 4 Pukeko Way, Amberley (with his/her/their successors and assigns called "the Owner(s)")

BACKGROUND:

A. The Owner(s) wishes to undertake building works on the property situated at 4 Pukeko Way, Amberley, legal description – Lot 25 DP 488914 (hereinafter called "the Land").

B. The Council's District Plan for the Land provides that the creation of any new vehicle crossing, or the use of an existing vehicle crossing for a new activity, (including the relocation of such) shall meet the standards of Rule 8.4.2 of the Hurunui District Plan. In this instance the vehicle crossing specifications are set out in the Consent Notice registered to the Certificate of Title.

C. The Applicant has applied for a building consent (BC200465) under the Building Act 2004. The proposed activity complies in all other aspects with District Plan requirements with the exception of the vehicle crossing formation and construction. In order for the Council to issue a Building Consent for a permitted activity, the Owner agrees to provide a Bond to secure the carrying out of the vehicle crossing construction. The construction of the vehicle crossing shall be undertaken within 12 months of the bond being entered into or before the use of the proposed activity commences, whichever is the lesser.

D. The estimated cost of the construction and formation of the vehicle crossing to the required standard under the Consent Notice is estimated to be the sum of $2500.

CONDITIONS OF BOND:

Urban Vehicle Crossing
A vehicle crossing shall be provided to the Land in accordance with a formed in accordance with DD-01 Vehicle Crossing Details ''Crossing type B'' to the Consent Notice registered to the Land's Certificate of Title.

Notes:

1. *District Plan rules set out the location and sight distance requirements.*
2. *The Bond will not be deemed to be given effect to until the accessway is dug out and inspected by the Council's engineer. As such, the hold will remain on the consent until this time.*
3. *Note that anyone working in the road reserve will first need to obtain a Corridor Access permit from Council via the beforeUdig service (online at beforeUdig.co.nz or by phone at 0800 248 344).*

THIS AGREEMENT RECORDS:

1. The Owner(s) has deposited with the Council the sum of **$3025** as surety for this Bond and agree that the Council may hold the said sum of money until the conditions of this Bond have been fully met or the moneys shall have otherwise been disbursed in accordance with the terms of this Agreement.

2. The Owners acknowledges that the following vehicle crossing inspections are compulsory and the owner is required to give the Councils engineer 48 hours' notice prior to any inspection.

   - Pre-construction
   - Excavation to sub grade
   - Pre Seal
   - Final

3. The Owner(s) shall complete the Work to the reasonable satisfaction of the Council within 12 months of the date of this bond or within such longer period as the Council may approve.

4. The sum deposited with the Council includes a non-refundable fee of $525 for administration and inspection costs incidental to the preparation and release of this Bond.

5. The Owner(s) acknowledges that their liability under this Agreement shall not be released, varied or affected in any way by any delay, extension of time, or other indulgence suffered or permitted by the Council or by any failure or neglect by the Council to enforce the terms of this Agreement.

   5.1 If the Owner(s) shall be in breach of any of the obligations under this Agreement, it shall be lawful for the Council, at the sole option of the Council to arrange for the satisfactory completion of all of the works and for this purpose the Council may employ its servants or agents or such contractors as the Council may see fit.

   5.2 The Owner(s) shall pay all costs incurred by the Council in arranging for the completion of those works and the Owner(s) shall be liable for any sum so expended by the Council or any expenses incurred by the Council in excess of the sum bonded.

   5.3 The Council may apply the moneys deposited with the Council towards payment of all such costs and expenses and in the event that the sum deposited with the Council is not sufficient to carry out the said works the Council may recover any excess from the Owner as a liquidated debt.

   5.4 In the event that costs and expenses incurred by the Council for the formation of the vehicle crossing are less than that sum deposited with the Council then the Owners shall be entitled to the repayment of the balance in accordance with the provisions in Clause 5.

6. Upon completion of the work being competed to the reasonable satisfaction of the Council in accordance with the Consent Notice the Owner(s) shall be entitled to repayment to them of the moneys deposited with the Council but without any entitlement to interest and any of the costs payable under clause 5 of this bond.

7. In the event of the Owner not proceeding with the building works then the sum bonded will be refunded to them in accordance with Clause 5.

8. The Owner(s) shall pay any costs and disbursements incurred by the Council for additional inspections and in the enforcement by the Council of any of its rights under this Agreement.

9. If there is dispute between the parties arising out of, or in connection with, this bond, neither of the parties is to commence any proceedings relating to that dispute until the following procedure had been complied with:

    9.1 The party claiming a dispute has arisen must give written notice to the other party specifying the nature of the dispute.

    9.2 The parties will endeavour, in good faith to resolve the dispute referred to in the notice by using informal dispute resolution techniques.

    9.3 If the parties do not agree on a dispute resolution technique within 14 days after the date notice of a dispute was given, the dispute is to be mediated according to the standard Bond of LEADR New Zealand Incorporated (Lawyers Engaged in Alternative Dispute Resolution), and the Chair of LEADR (or the Chair's nominee) will select the mediator and determine the mediator's remuneration.

    9.4 A party seeking urgent interlocutory relief may, by notice to the other party, elect not to comply with the provisions of this clause, but only to the extent of the relief sought, and only for the period required to dispose of the application for interlocutory.

    9.5 Pending resolution of the dispute, this Bond will remain in full effect without prejudicing the parties' respective rights and remedies.

SIGNED by

_____ and

_____

in the presence of:

_____
Name of Witness

_____
Signature of Witness

_____
Address of Witness

_____
Occupation of Witness

HDC Approved Consent Document (In accordance with BA 2004, Cl. 49(1)) - Processed by : Brenna Ogier - BC No. 200465

PROPOSED NEW DWELLING

4 Pukeko Way, Amberley

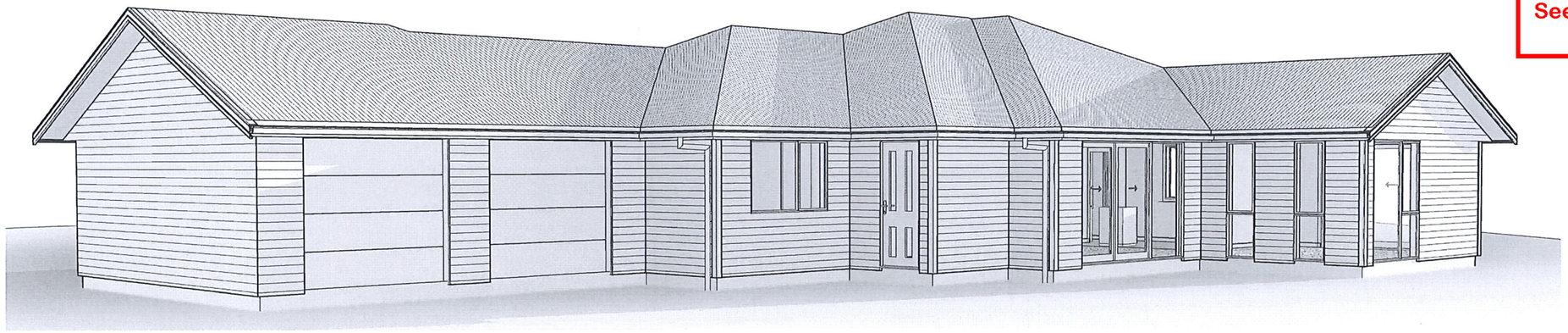

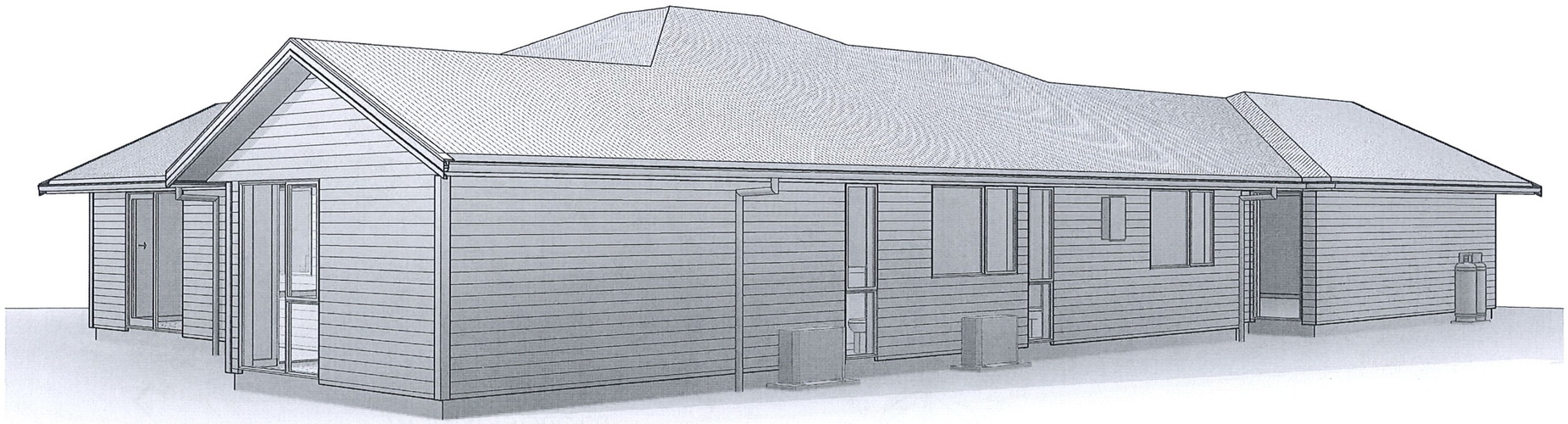

TRIDENT HOMES®
CHRISTCHURCH NORTH

Copyright: This drawing remains the property of Trident Homes NZ Ltd and may not be used or reproduced in whole or in part without written permission.

SUPERSEDED
For amendment
23 Feb 2021
See consent no.
200465A

LICENSED BUILDING PRACTITIONER · BUILDING CONFIDENCE ·

'Always check the LBP Register to ensure you building practitioner is licensed'.

DRAWING LEGEND

SHT	SHEET NAME
01	SITE & DRAINAGE
02	FLOOR PLAN
03	ELEVATIONS
04	FOUNDATION PLAN
05	FOUNDATION DETAILS
06	ROOF PLAN
07	ROOF FLASHING DETAILS
08	BRACING PLAN
09	PLUMBING PLAN
10	DRAINS IN GROUND
11	SECTION
12	STRUCTURE DETAILS
13	CLADDING DETAILS
14	CLADDING DETAILS
15	WET AREA DETAILS
16	FLOOR COVERINGS PLAN
17	JOINERY SCHEDULE

Wind Zone -	High Wind Zone	Legal Description:	LOT 25 DP 488914
Exposure Zone -	B	Site Address:	4 Pukeko Way, Amberley
Earthquake Zone -	3	Valuation Number:	2143003127
Snow Zone -	N4	Site Area:	2246 m²
Snow Loading -	1 kPa	Zone:	Residential 3
Altitude -	40m - ASL	Region:	Hurunui District Council

GENERAL NOTES:

No construction work is to commence until the related building Consent has been obtained. All dimensions & service locations to be checked onsite before commencement of all work. Confirm all Site levels, Floor heights and Site Boundaries before commencement of earthworks. Ground bearing to be confirmed onsite after excavation and before building starts.
PLANS TO BE READ IN CONJUNCTION WITH PROJECT SPECIFICATION.

F5 - WORK SITE BARRIERS.

If the work site is not completely enclosed, and unauthorized entry by children is likely, allow for site fencing when workers are absent from the immediate vicinity. Allow for 2m min high site fence to proposed building perimeter over duration of construction in accordance with Compliance Document Clause F5 of the NZBC. All contractors to abide by Trident Homes safety plan. Allow for toeboards to access and storage platforms, toeboards to be 100min above the platform height (10mm max gap between the platform & toeboard), and no lower than the materials stacked on them unless the materials are restrained from falling.

Sho PW

Proposed NEW DWELLING for
Wendy & Steven Olliver,
Address: 4 Pukeko Way, Amberley

HDC Approved Consent Document (In accordance with BA 2004, Cl. 49(1)) - Processed by : Brenna Ogier - BC No. 200465

50mm 100mm Original Scale

WIND ZONE CALCULATIONS.

DETERMINATION OF A WIND ZONE - NZS3604:2011

Wind Region -	A
Lee Zone -	No
Ground roughness -	Open
Site exposure -	Exposed
Topography Class -	T1 - Undulations <10m
Building wind zone -	H = Wind speed of 44 m/s

50mm

DRAINAGE LEGEND

d.p.	Downpipe.
ip	Inspection Point.
—·—·—·—	Stormwater drain DN 100 @ 1:120 min fall.
BK	Existing Boundary Kit.
— — — — —	DN40 PE100 PN16 pressure sewer line.

100mm

SUPERSEDED
For amendment
23 Feb 2021
See consent no.
200465A

Soak Pit Cross Section

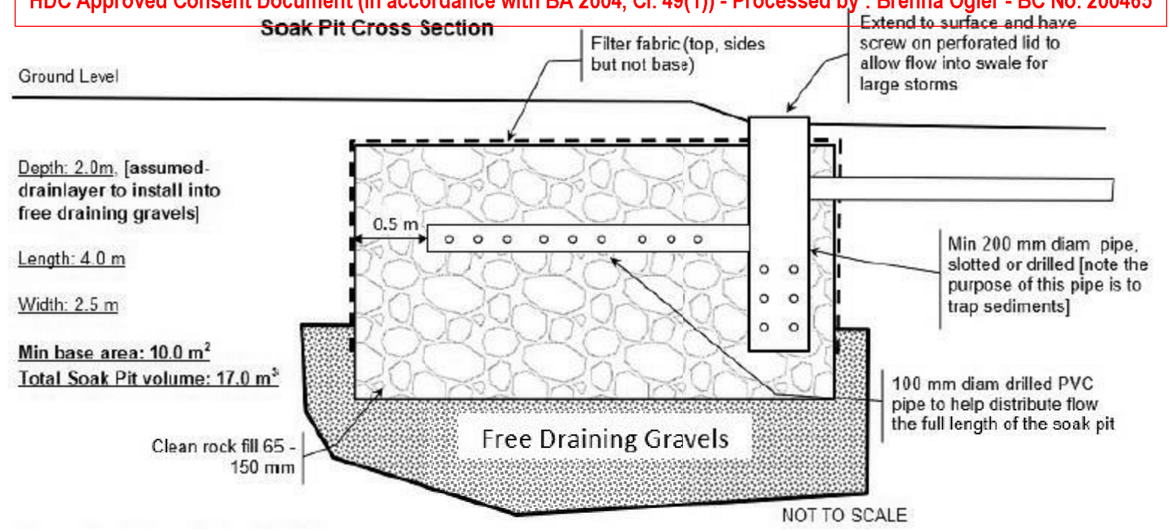

SOAK PIT DETAIL

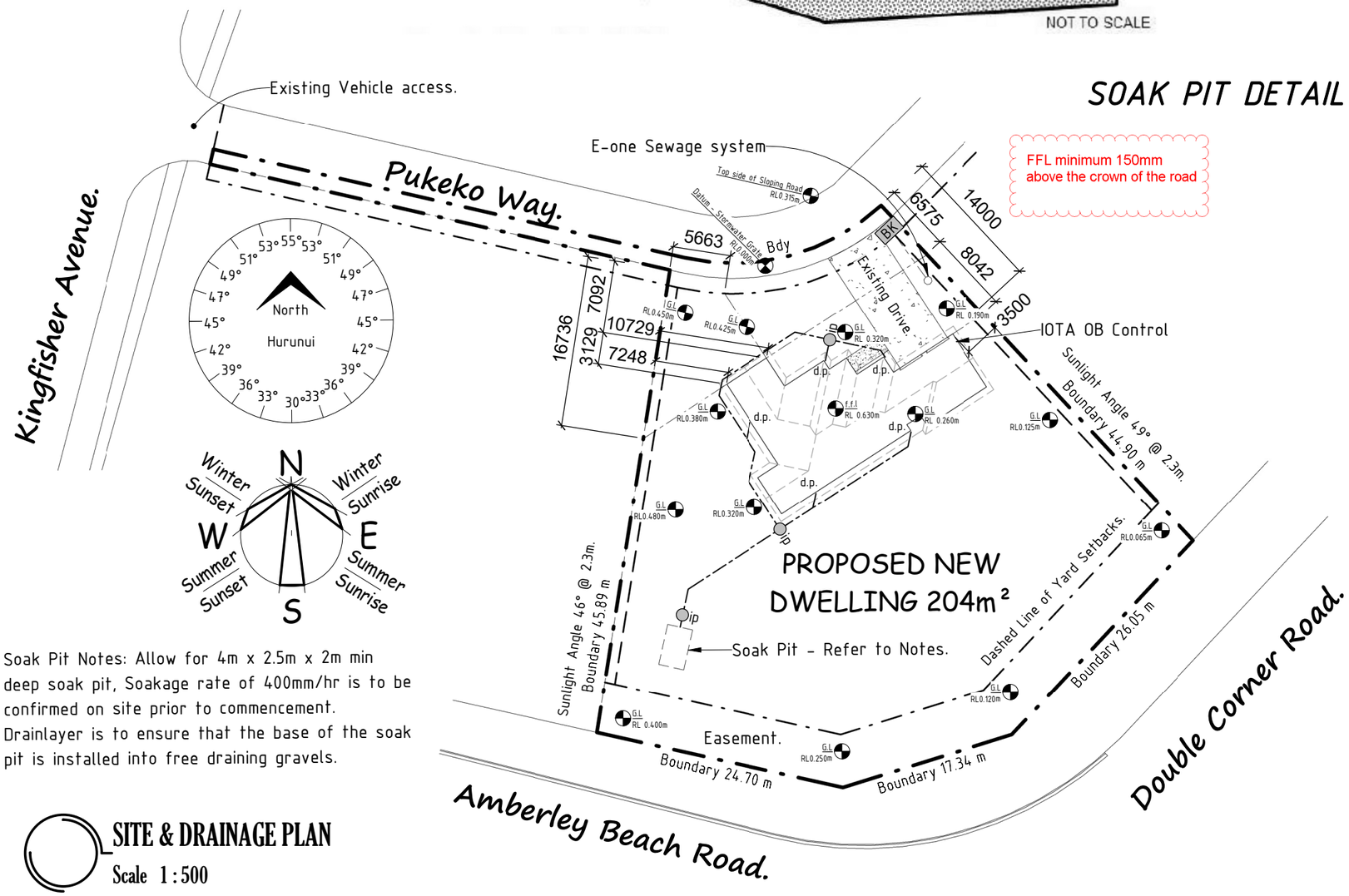

Soak Pit Notes: Allow for 4m x 2.5m x 2m min deep soak pit, Soakage rate of 400mm/hr is to be confirmed on site prior to commencement. Drainlayer is to ensure that the base of the soak pit is installed into free draining gravels.

SITE & DRAINAGE PLAN

Scale 1 : 500

Proposed NEW DWELLING for Wendy & Steven Olliver, Address: 4 Pukeko Way, Amberley

TRIDENTHOMES® CHRISTCHURCH NORTH

COPYRIGHT: This drawing remains the property of Trident Homes NZ Ltd and may not be used or reproduced in whole or in part without written permission.

Project : PROPOSED NEW DWELLING for Client : Wendy & Steven Olliver Address : 4 Pukeko Way, Amberley	JOB # : 4_Pukeko	Drw Name : SITE & DRAINAGE			Builder.	Client.
	Drawn By : LBP 113870	DATE : NOV 2020	NOTE : do not scale from this drawing.	SCALE @ A3 Sht. As indicated	REV # E	DRW # 01

22/01/2021 10:38:35 am

50mm 100mm Original Scale

50mm

100mm

A-A 11

HDC Approved Consent Document (In accordance with BA 2004, Cl. 49(1)) - Processed by : Brenna Ogier - BC No. 200465

ELECTRICAL LEGEND

- Smoke Alarm with test & Hush facility.
- MB - Meterbox / Switchboard.

PLUMBING LEGEND

Code	Description	Model
BATH	Bath	Astivita Veneto
DW	Dish Washer	Proprietary
S	Kitchen Sink	Proprietary
SHR	Acrylic shower	1000x1000mm
Tub	Laundry Tub	Proprietary
V	Vanity	900x400mm
WC	Toilet	S Trap
WM	Washing Machine	Proprietary

JOINERY SCHEDULE

Mark	Width	Height	Lintels
GD	2400 mm	2150 mm	190x88 PL8
GD	2400 mm	2150 mm	190x88 PL8
W01	885 mm	2150 mm	2/90x45
W02	1800 mm	1200 mm	140x90 PL8
W03	885 mm	2150 mm	2/90x45
W04	885 mm	2150 mm	2/90x45
W05	1800 mm	1200 mm	140x88 PL8
W06	600 mm	2150 mm	2/90x45
W07	1800 mm	1200 mm	140x88 PL8
W08	600 mm	2150 mm	2/90x45
W09	1800 mm	2150 mm	140x88 PL8
W10	1500 mm	2150 mm	140x88 PL8
W11	1500 mm	1200 mm	190x88 PL8
W12	2000 mm	2150 mm	140x88 PL8
W13	1800 mm	2150 mm	140x88 PL8
W14	600 mm	2150 mm	2/90x45
W15	600 mm	2150 mm	2/90x45
W16	3200 mm	2150 mm	240x88 PL8

03 West Elevation

03 North Elevation

South Elevation 03

East Elevation 03

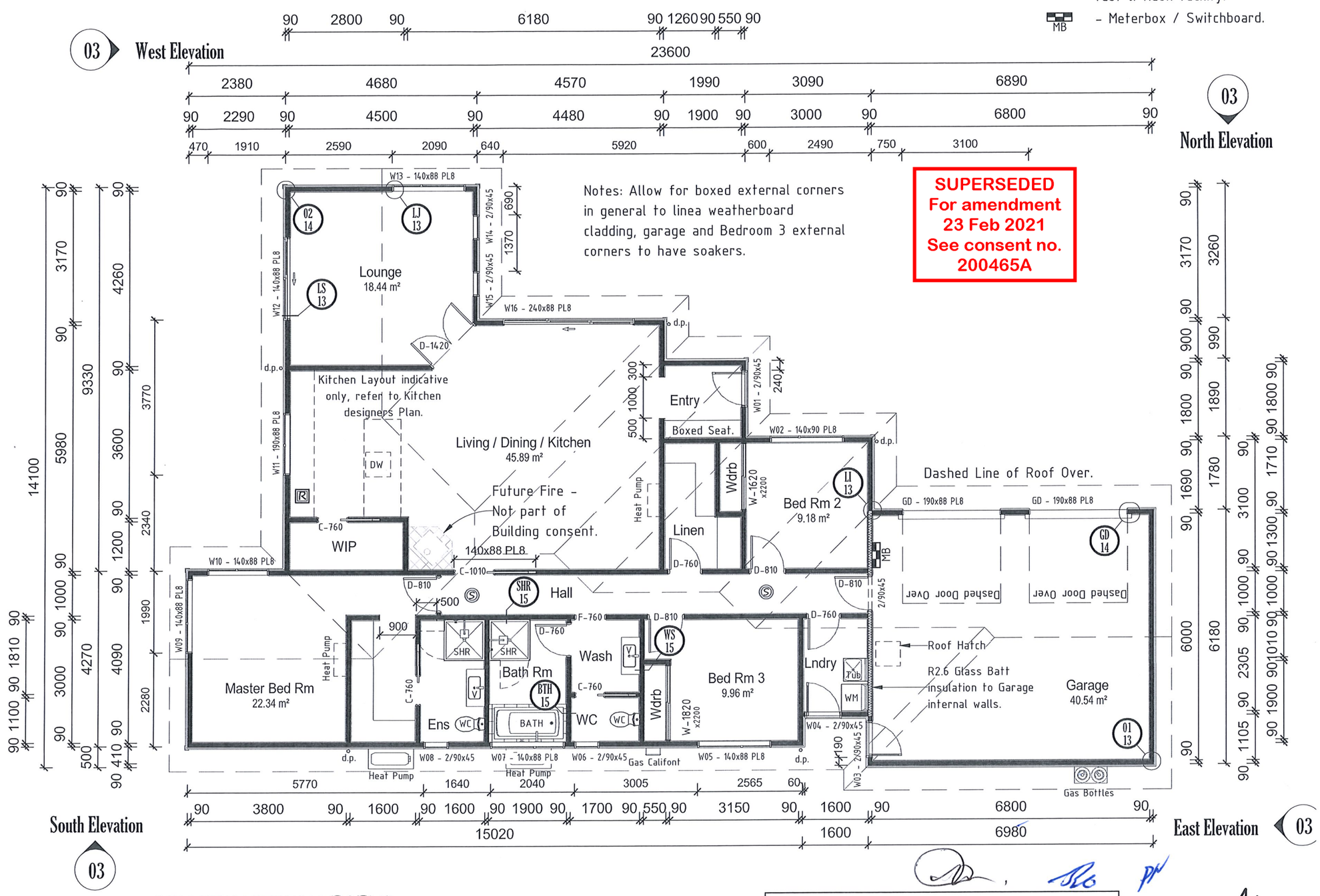

CONSTRUCTION LEGEND.

- Internal wall.
- External Wall - Linea weatherboards over 20nom Cavity.

PROPOSED FLOOR PLAN

Scale 1 : 100

FLOOR AREA SCHEDULE - CLAD

DESCRIPTION	AREA (O/FRAME) /	PERIMETER (O/FRAME) /	CLAD THICKNESS /	AREA OVER CLAD /
Insitu Slab	204.24 m²	76.79 m	60 mm	208.84 m²

G.F f.f.l	0.000 m
G.F T.P.	2.455 m

TRIDENT HOMES® CHRISTCHURCH NORTH

COPYRIGHT: This drawing remains the property of Trident Homes NZ Ltd and may not be used or reproduced in whole or in part without written permission.

Project : PROPOSED NEW DWELLING for Client : Wendy & Steven Olliver Address : 4 Pukeko Way, Amberley	JOB # : 4_Pukeko	Drw Name : FLOOR PLAN		Builder.	Client.
	Drawn By : LBP 113870	DATE : NOV 2020	NOTE : do not scale from this drawing.	SCALE @ A3 Sht. As indicated	REV # E
					DRW # 02

50mm 100mm Original Scale

HDC Approved Consent Document (In accordance with BA 2004, Cl. 49(1)) - Processed by : Brenna Ogier - BC No. 200465

SUPERSEDED
For amendment
23 Feb 2021
See consent no.
200465A

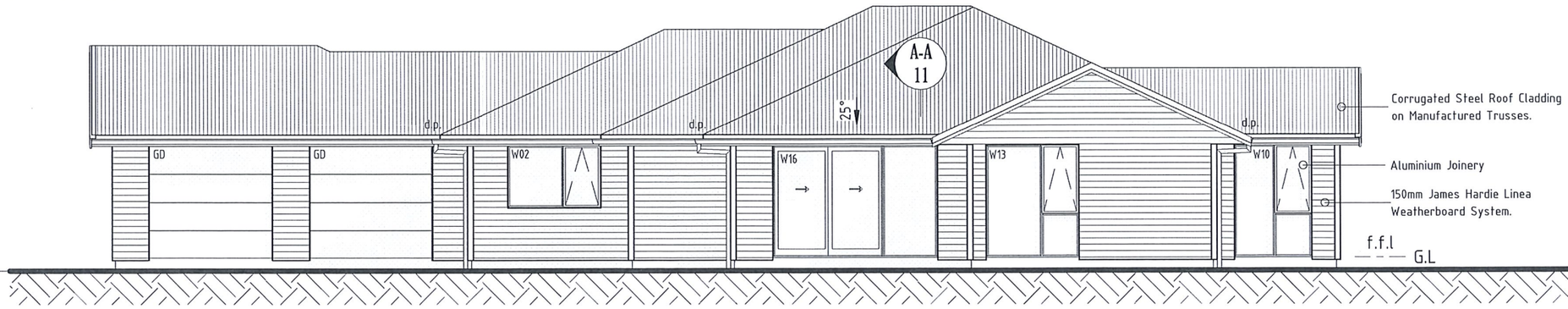

North Elevation
Scale 1 : 100

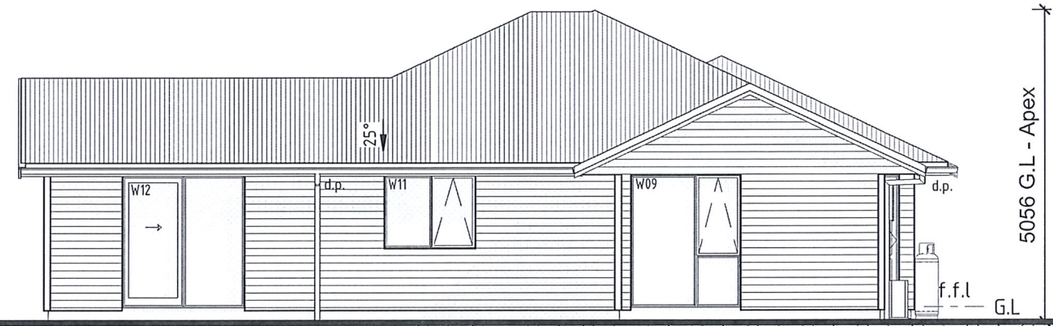

BUILDING ENVELOPE RISK MATRIX.

Risk Factor -	Risk -	Score -	Comments -
Wind Zone -	High Risk	1	High Wind Zone.
Number of storeys -	Low Risk	0	One Storey.
Roof/wall design -	Low Risk	0	Fully Protected.
Eaves width -	Medium Risk	1	451 - 600mm single storey.
Envelope complexity -	Low Risk	0	Single cladding.
Deck design -	Low Risk	0	Nil.

Total risk score -	2

NOTE: This risk matrix covers all four elevations.

West Elevation
Scale 1 : 100

CLAD TO GROUND CLEARANCE NOTES.

f.f.l shall be 150min above crown of road on at least one cross section through the building and road way, or for sites below the road 150min above the lowest point on the Site Boundary.
Excavate locally around perimeter of building, ground to fall away from building not less than 1 in 25 for a minimum distance of 1000mm.
Cladding adjacent to permanent paving - 150min from f.f.l to F.G.L
Allow for 100min between base of cladding and permanent paving.
Cladding adjacent to unprotected ground - 225min from f.f.l to F.G.L
Allow for 175min between base of cladding and Unprotected ground.
Cladding to overlap the concrete slab by 50min.

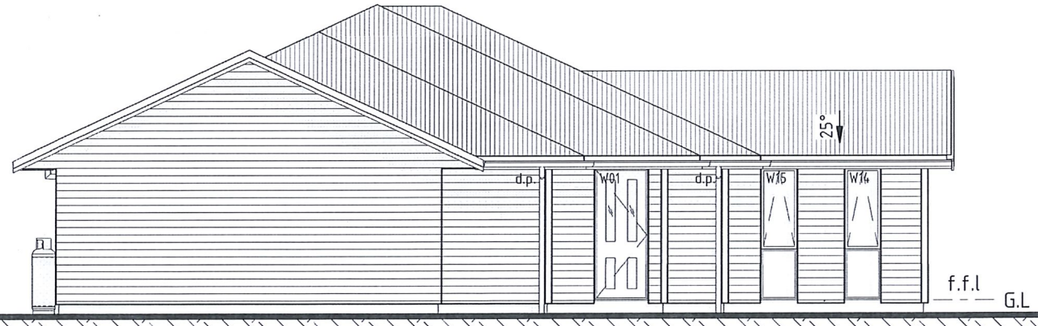

East Elevation
Scale 1 : 100

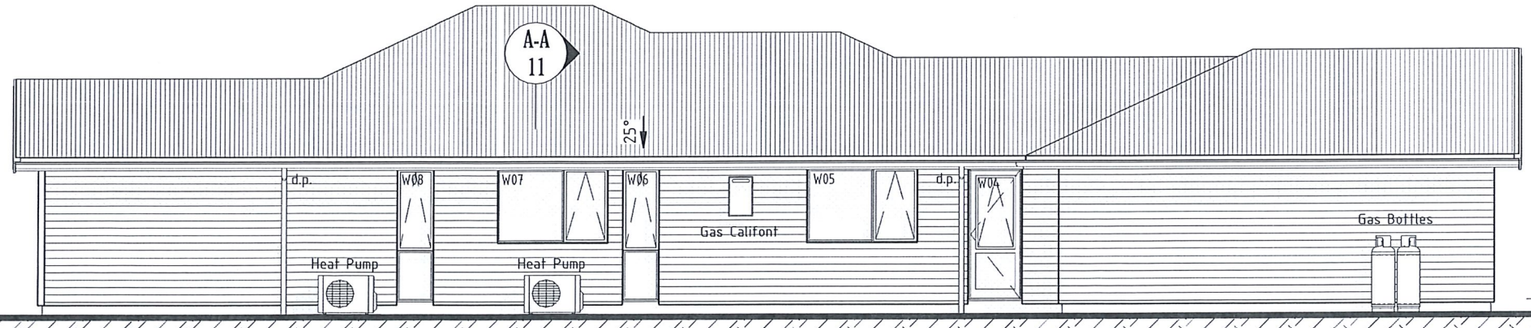

South Elevation
Scale 1 : 100

COPYRIGHT: This drawing remains the property of Trident Homes NZ Ltd and may not be used or reproduced in whole or in part without written permission.

TRIDENT HOMES®
CHRISTCHURCH NORTH

Project : PROPOSED NEW DWELLING for Client : Wendy & Steven Olliver Address : 4 Pukeko Way, Amberley	JOB # : 4_Pukeko	Drw Name : ELEVATIONS			Builder.	Client.
	Drawn By : LBP 113870	DATE : NOV 2020	NOTE : do not scale from this drawing.	SCALE @ A3 Sht. As indicated	REV # E	DRW # 03

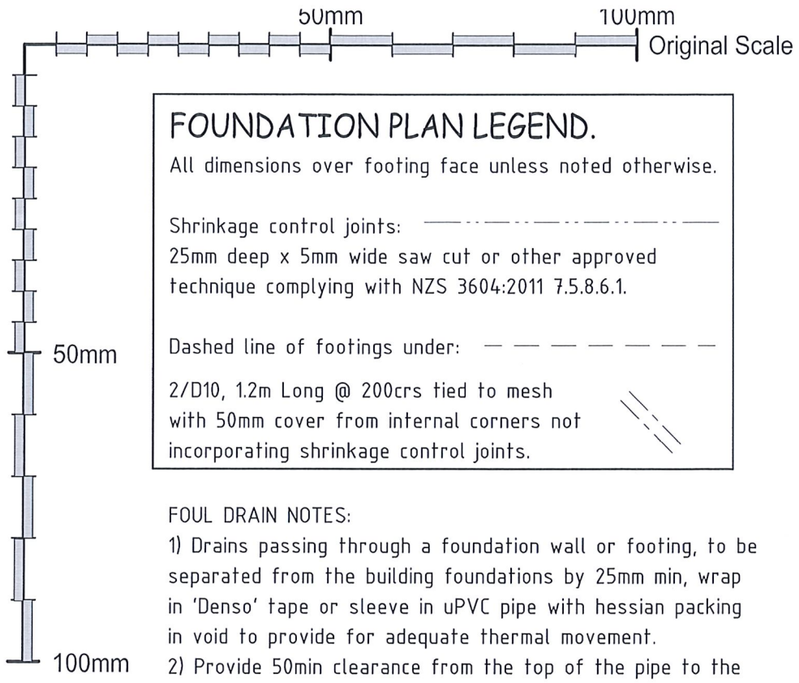

FOUNDATION PLAN LEGEND.

All dimensions over footing face unless noted otherwise.

Shrinkage control joints:
25mm deep x 5mm wide saw cut or other approved technique complying with NZS 3604:2011 7.5.8.6.1.

Dashed line of footings under:

2/D10, 1.2m Long @ 200crs tied to mesh with 50mm cover from internal corners not incorporating shrinkage control joints.

FOUL DRAIN NOTES:

1) Drains passing through a foundation wall or footing, to be separated from the building foundations by 25mm min, wrap in 'Denso' tape or sleeve in uPVC pipe with hessian packing in void to provide for adequate thermal movement.
2) Provide 50min clearance from the top of the pipe to the under side of the slab with no junctions at an angle of more than 45°, all pipework cast into concrete slab to be wrapped in 'Denso' tape or sleeve in uPVC pipe with hessian packing in void to provide for adequate thermal movement.

Allow for Electrical earth rod located below meterbox as detailed.

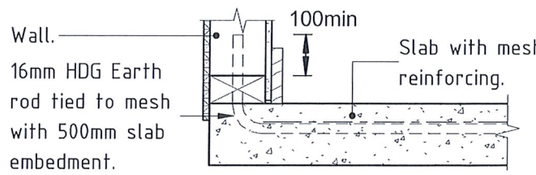

EARTH ROD DETAIL
Scale 1 : 10

HDC Approved Consent Document (In accordance with BA 2004, Cl. 49(1)) - Processed by : Brenna Ogier - BC No. 200465

SUPERSEDED For amendment 23 Feb 2021 See consent no. 200465A

NOTES: ⌖ Drain Waste.
1) Check all waste locations with manufacturers specifications, locations are indicative only, plumber to confirm dims on site.
2) Refer to Kitchen Designers Plan for Sink waste Location.
3) Refer to footing details for foundation notes.

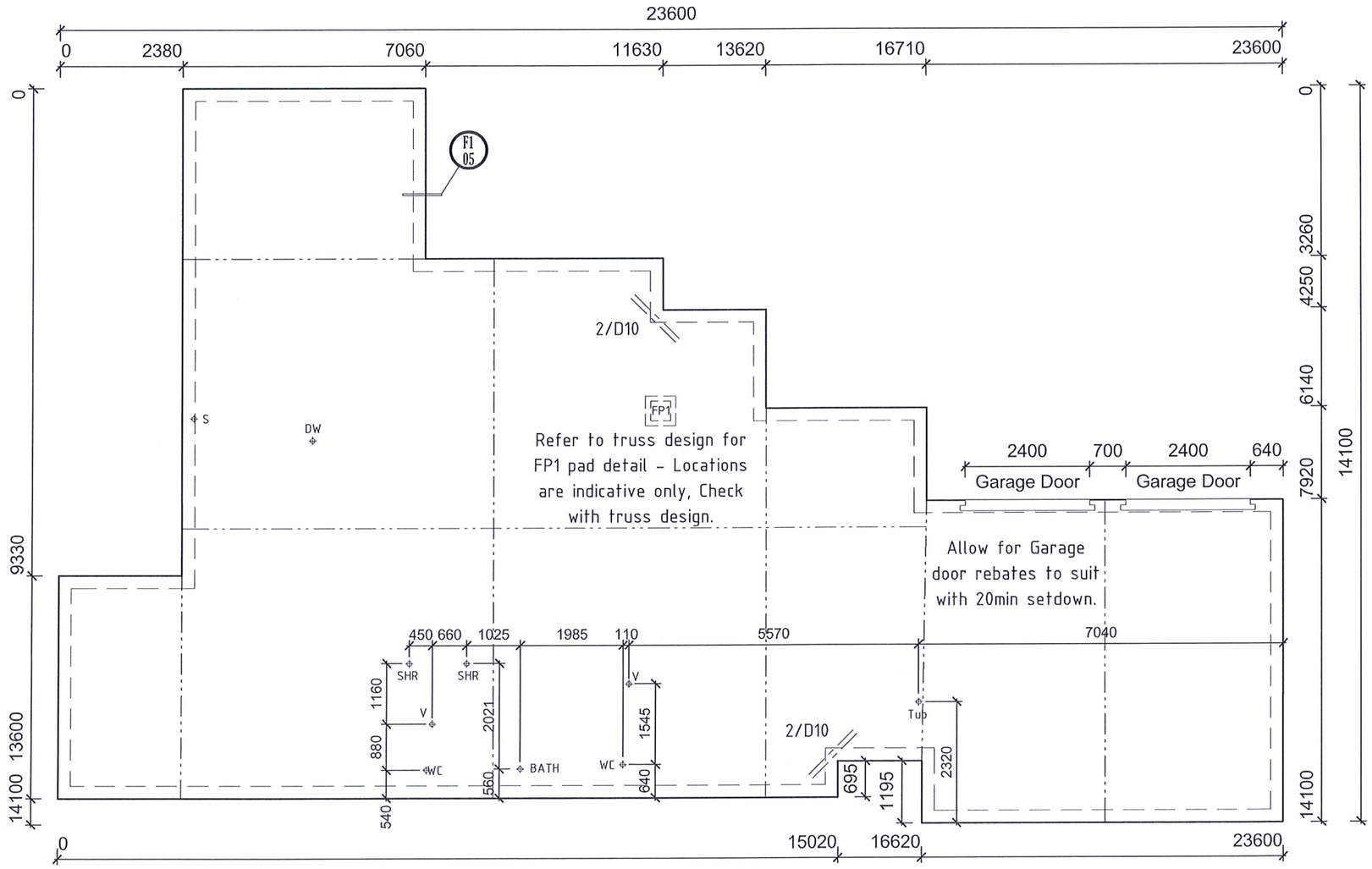

FOUNDATION PLAN
Scale 1 : 100

FLOOR AREA SCHEDULE - CLAD

DESCRIPTION	AREA (O/FRAME) /	PERIMETER (O/FRAME) /	CLAD THICKNESS /	AREA OVER CLAD /
Insitu Slab	204.24 m²	76.79 m	60 mm	208.84 m²



TRIDENT HOMES® CHRISTCHURCH NORTH

COPYRIGHT: This drawing remains the property of Trident Homes NZ Ltd and may not be used or reproduced in whole or in part without written permission.

Project : PROPOSED NEW DWELLING for Client : Wendy & Steven Olliver Address : 4 Pukeko Way, Amberley	JOB # : 4_Pukeko	Drw Name : FOUNDATION PLAN			Builder.	Client.
	Drawn By : LBP 113870	DATE : NOV 2020	NOTE : do not scale from this drawing.	SCALE @ A3 Sht. As indicated	REV # E	DRW # 04

HDC Approved Consent Document (In accordance with BA 2004, Cl. 49(1)) - Processed by : Brenna Ogier - BC No. 200465

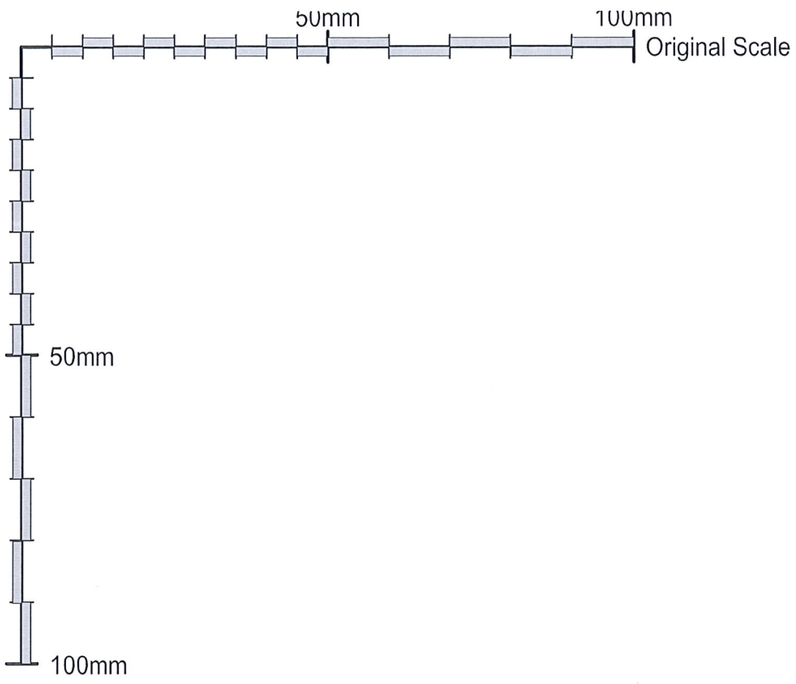

NOTES:

1) Allow for Lumberlok bottom plate anchors to external walls within 150mm of ends of bottom plates and at 900crs max installed to manufacturers specifications.

2) Steel Mesh type 500E SE62 Concrete strength to be 20MPa.
All reinforcing to be 300E grade & shall extend to within 75 mm of the outside edge of the slab, be lapped at sheet joints such that the overlap measurement between the outmost cross wires of each fabric sheet is equal to the greater of the spacings of the cross wires plus 50mm, 150mm, or the manufacturer's requirements. Allow for 600min Lap for Horizontal D16 reinforcing bars.

3) Fix internal wall bottom plates to slab with power driven 75mm Concrete nails with 12mm discs @ 900crs max.

4) 0.25min Polyethylene lap joints to have 150min overlap and sealed with pressure sensitive lap tape 50min wide, unless self sealing polythene sheets are used.

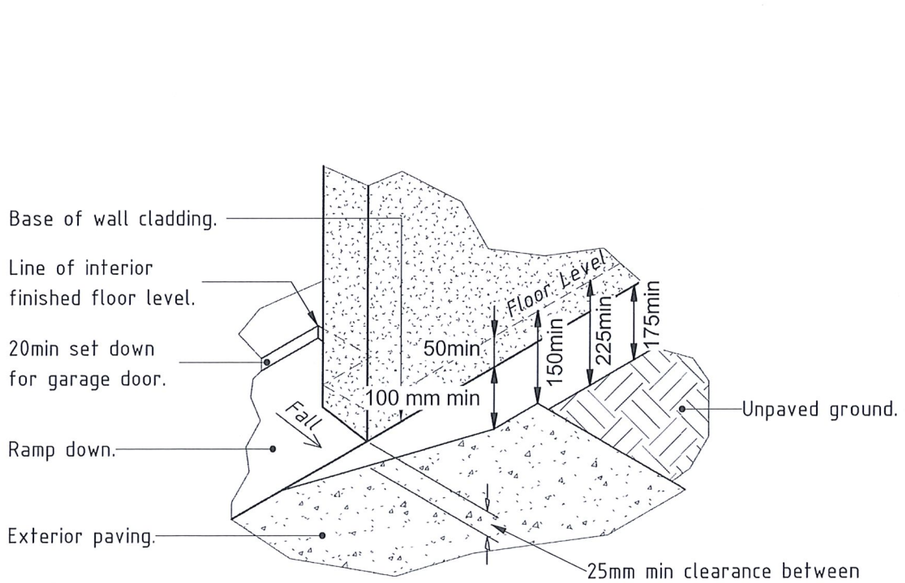

GARAGE DOOR BASE DETAIL
Scale : N.T.S

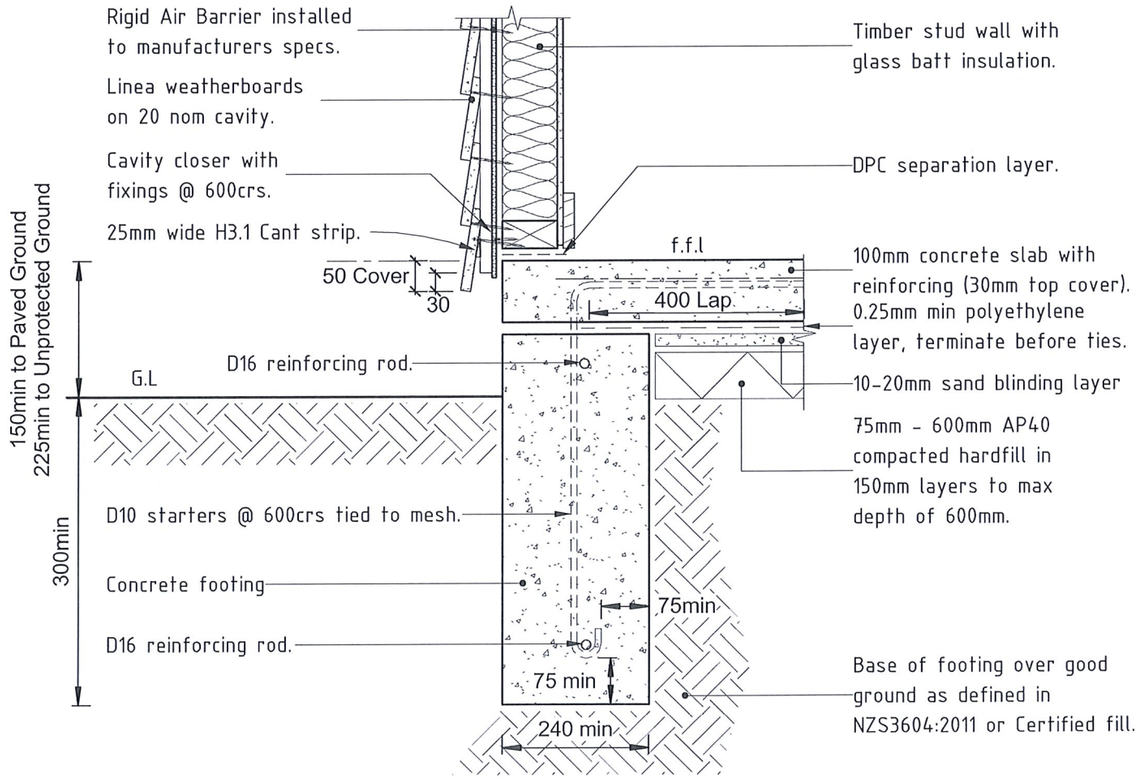

F1 LINEA FOOTING DETAIL
Scale 1 : 10

COPYRIGHT: This drawing remains the property of Trident Homes NZ Ltd and may not be used or reproduced in whole or in part without written permission.

TRIDENT HOMES®
CHRISTCHURCH NORTH

Project : PROPOSED NEW DWELLING for Client : Wendy & Steven Olliver Address : 4 Pukeko Way, Amberley	JOB # : 4_Pukeko	Drw Name : FOUNDATION DETAILS		Builder.	Client.
	Drawn By : LBP 113870	DATE : NOV 2020	NOTE : do not scale from this drawing.	SCALE @ A3 Sht. 1 : 10	REV # E	DRW # 05

HDC Approved Consent Document (In accordance with BA 2004, Cl. 49(1)) - Processed by : Brenna Ogier - BC No. 200465

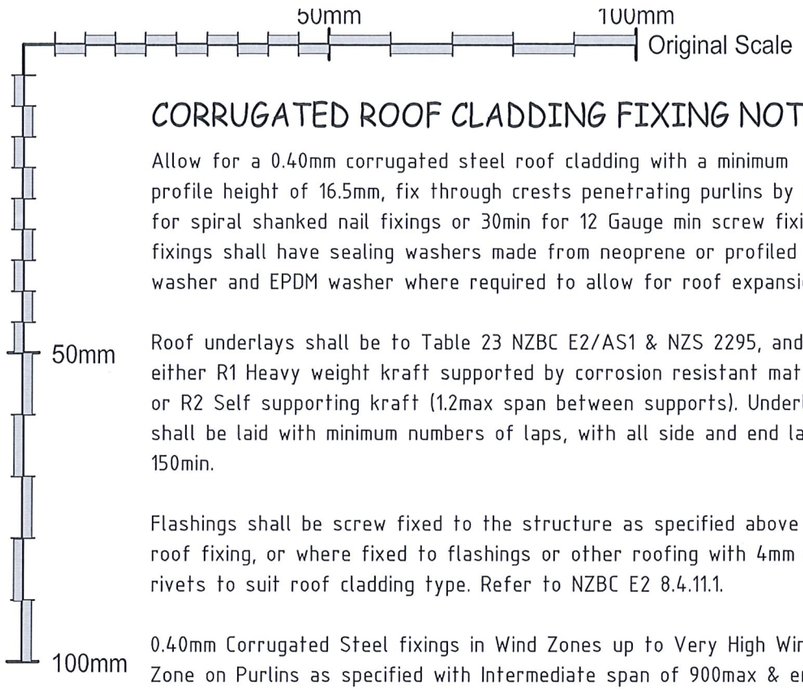

CORRUGATED ROOF CLADDING FIXING NOTES.

Allow for a 0.40mm corrugated steel roof cladding with a minimum profile height of 16.5mm, fix through crests penetrating purlins by 40min for spiral shanked nail fixings or 30min for 12 Gauge min screw fixings, fixings shall have sealing washers made from neoprene or profiled washer and EPDM washer where required to allow for roof expansion.

Roof underlays shall be to Table 23 NZBC E2/AS1 & NZS 2295, and be either R1 Heavy weight kraft supported by corrosion resistant material, or R2 Self supporting kraft (1.2max span between supports). Underlays shall be laid with minimum numbers of laps, with all side and end laps at 150min.

Flashings shall be screw fixed to the structure as specified above for roof fixing, or where fixed to flashings or other roofing with 4mm dia rivets to suit roof cladding type. Refer to NZBC E2 8.4.11.1.

0.40mm Corrugated Steel fixings in Wind Zones up to Very High Wind Zone on Purlins as specified with Intermediate span of 900max & end span of 600max, fix as follows "Hit 1, Miss1, Hit 1, Miss 2".

SUPERSEDED
For amendment
23 Feb 2021
See consent no.
200465A

DOWN PIPE SCHEDULE			
PITCH	Prefix	Size	Max Area Served
Allow for Stratco Quad gutter with 6,200mm² cross section area.			
25.00°	d.p.	80Φ	85 m²
25.00°	d.p.	80Φ	85 m²
25.00°	d.p.	80Φ	85 m²
25.00°	d.p.	80Φ	85 m²
25.00°	d.p.	80Φ	85 m²
Total Roof Area Served			425 m²

ROOF AREA & BRACING SCHEDULE - Hip & Gable							
PITCH	SURFACE AREA	PLAN AREA	Light Roof	Braces Required	Hips & Valleys	Additional Braces Required	ROOF BRACING REQUIRED
25°	275 m²	249.2 m²	Yes	5	10	0	No

ROOF BRACING LEGEND.

Brace.

Allow for Continuous 90x19mm timber Brace at 45° to the ridge line spanning from the ridge to the supporting wall were specified - Refer to project spec for Timber Roof Plane Brace spec.

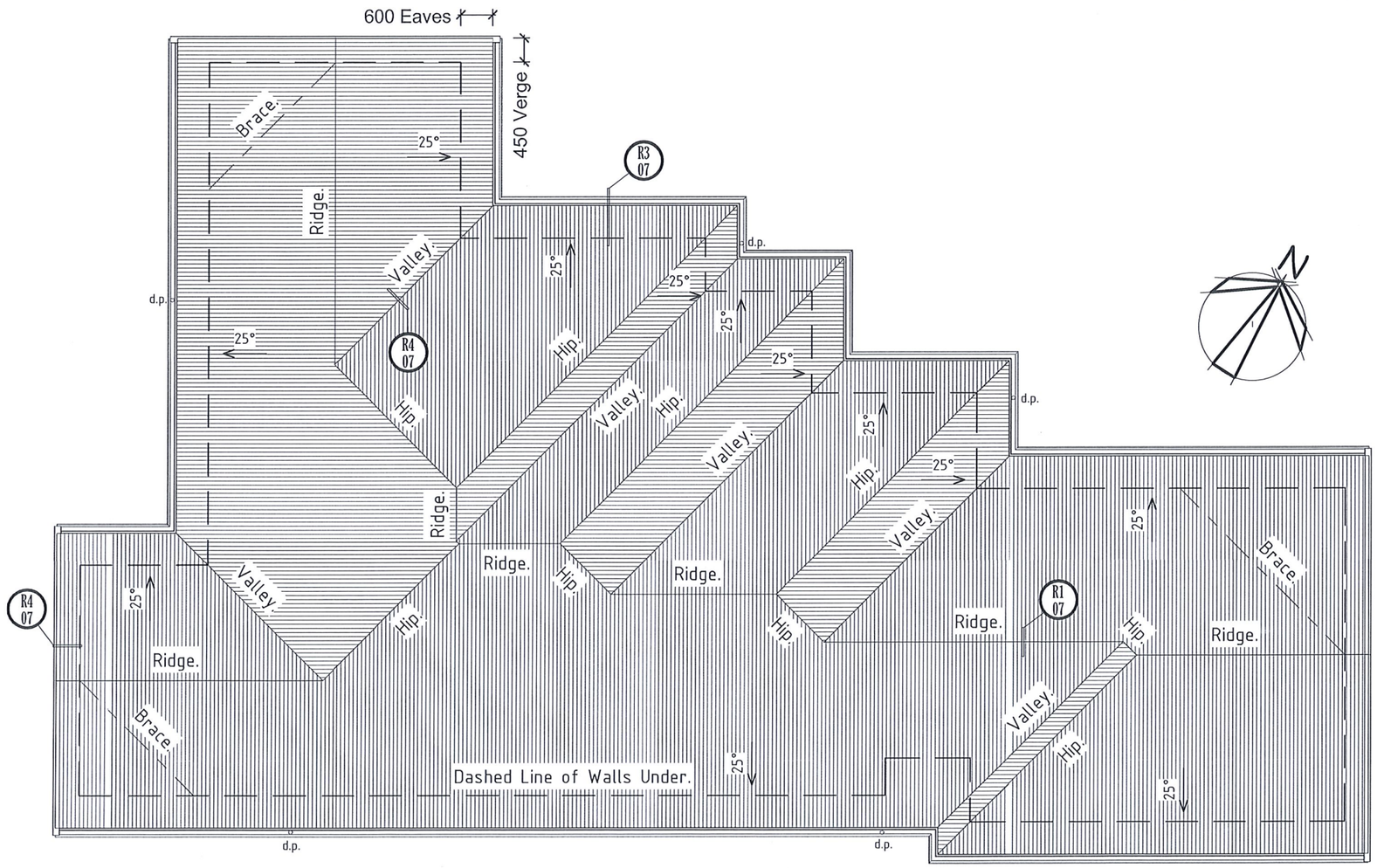

ROOF PLAN
Scale 1 : 100

PN

TRIDENT HOMES®
CHRISTCHURCH NORTH

COPYRIGHT: This drawing remains the property of Trident Homes NZ Ltd and may not be used or reproduced in whole or in part without written permission.

Project : PROPOSED NEW DWELLING for Client : Wendy & Steven Olliver Address : 4 Pukeko Way, Amberley	JOB # : 4_Pukeko	Drw Name : ROOF PLAN			Builder.	Client.
	Drawn By : LBP 113870	DATE : NOV 2020	NOTE : do not scale from this drawing.	SCALE @ A3 Sht. As indicated	REV # E	DRW # 06

HDC Approved Consent Document (In accordance with BA 2004, Cl. 49(1)) - Processed by : Brenna Ogier - BC No. 200465

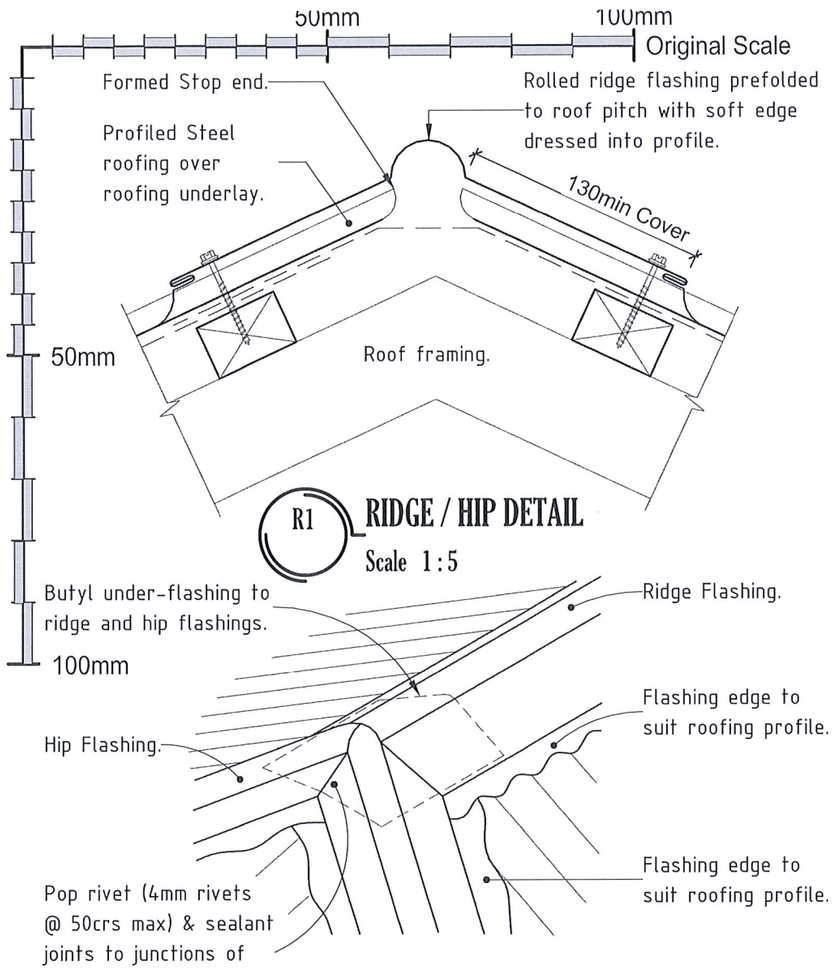

R1 **RIDGE / HIP DETAIL**
Scale 1:5

NOTE :
(1) Max roof pitch for this flashing 45°, minimum pitch 10° if base flange covers one or more complete troughs.
(2) For pipes up to 85mmØ
(3) Not to be used on a side lap.

RIDGE / HIP FLASHING DETAIL
Scale : N.T.S

PIPE FLASHING DETAIL (Up to 85 DN)
Scale : N.T.S

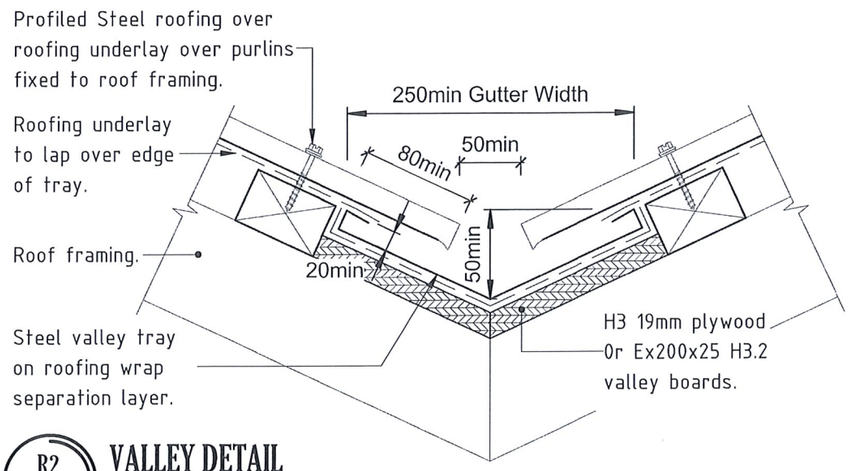

R2 **VALLEY DETAIL**
Scale 1:5

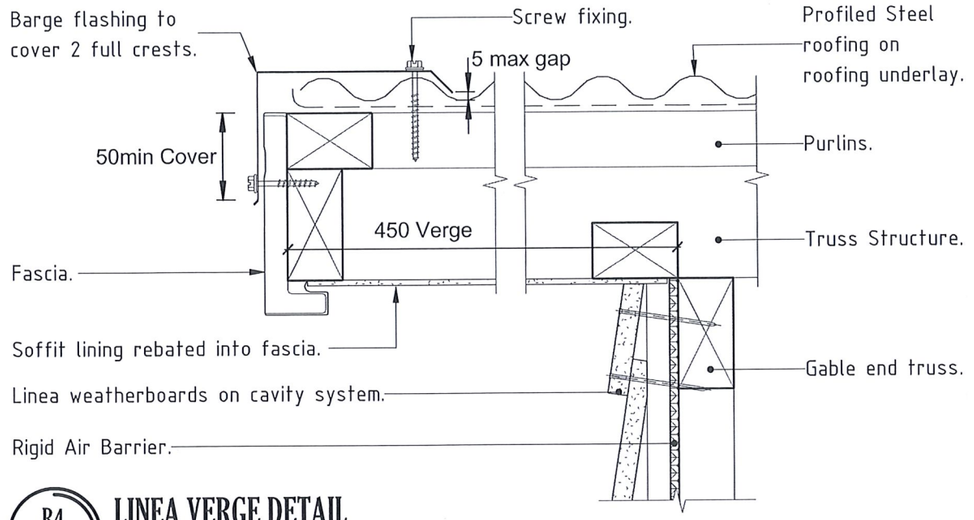

R4 **LINEA VERGE DETAIL**
Scale 1:5

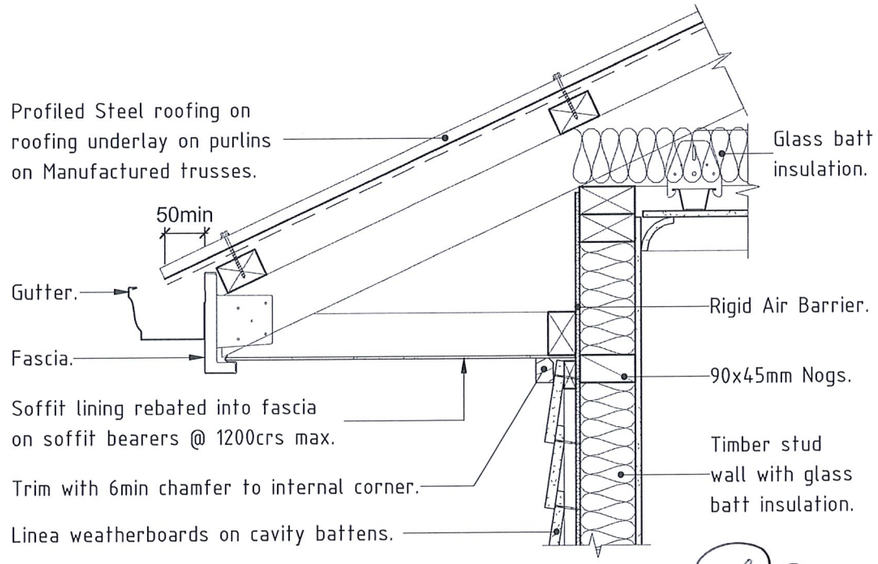

R3 **LINEA EAVES DETAIL**
Scale 1:10

TRIDENT HOMES®
CHRISTCHURCH NORTH

COPYRIGHT: This drawing remains the property of Trident Homes NZ Ltd and may not be used or reproduced in whole or in part without written permission.

Project : PROPOSED NEW DWELLING for Client : Wendy & Steven Olliver Address : 4 Pukeko Way, Amberley	JOB # : 4_Pukeko	Drw Name : ROOF FLASHING DETAILS			Builder.	Client.
	Drawn By : LBP 113870	DATE : NOV 2020	NOTE : do not scale from this drawing.	SCALE @ A3 Sht. As indicated	REV # E	DRW # 07

HDC Approved Consent Document (In accordance with BA 2004, Cl. 49(1)) - Processed by : Brenna Ogier. - BC No. 200465

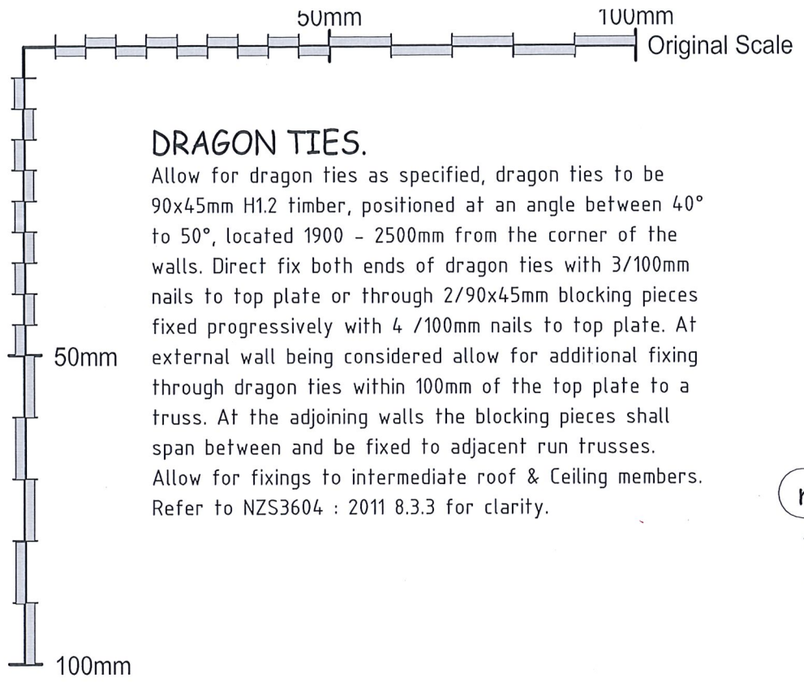

DRAGON TIES.

Allow for dragon ties as specified, dragon ties to be 90x45mm H1.2 timber, positioned at an angle between 40° to 50°, located 1900 - 2500mm from the corner of the walls. Direct fix both ends of dragon ties with 3/100mm nails to top plate or through 2/90x45mm blocking pieces fixed progressively with 4 /100mm nails to top plate. At external wall being considered allow for additional fixing through dragon ties within 100mm of the top plate to a truss. At the adjoining walls the blocking pieces shall span between and be fixed to adjacent run trusses. Allow for fixings to intermediate roof & Ceiling members. Refer to NZS3604 : 2011 8.3.3 for clarity.

SUPERSEDED
For amendment
23 Feb 2021
See consent no.
200465A

Code	Description	Bracket
GS1-N	Gib Std One Side Only	No
Sys 1	RigidRAP 1 Side	Yes
Sys 2	RigidRAP 1 Side	Yes
Sys 3	RigidRAP 1 Side	Yes
Sys 4	RigidRAP 1 Side	Yes
Sys 5	RigidRAP 1 Side	Yes

WALL BRACING LEGEND.

A ---- Bracing Line
A1/1.200/GS1-N
Bracing #/ Length/ Element type
Note - Do not install brace elements behind showers or baths.

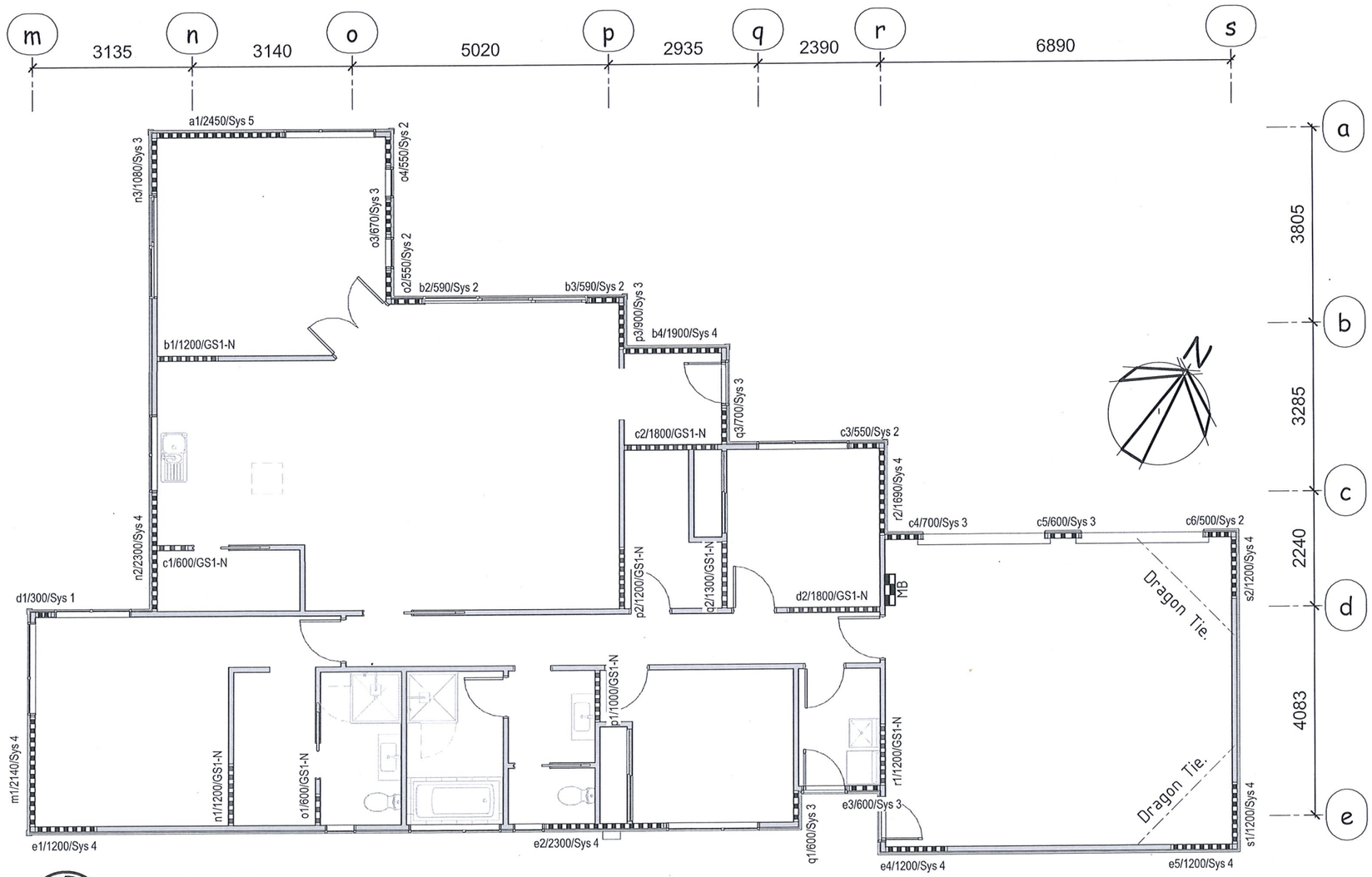

BRACING PLAN

Scale 1 : 100

TRIDENT HOMES®
CHRISTCHURCH NORTH

COPYRIGHT: This drawing remains the property of Trident Homes NZ Ltd and may not be used or reproduced in whole or in part without written permission.

Project : PROPOSED NEW DWELLING for Client : Wendy & Steven Olliver Address : 4 Pukeko Way, Amberley	JOB # : 4_Pukeko	Drw Name : BRACING PLAN			Builder.	Client.
	Drawn By : LBP 113870	DATE : NOV 2020	NOTE : do not scale from this drawing.	SCALE @ A3 Sht. As indicated	REV # E	DRW # 08

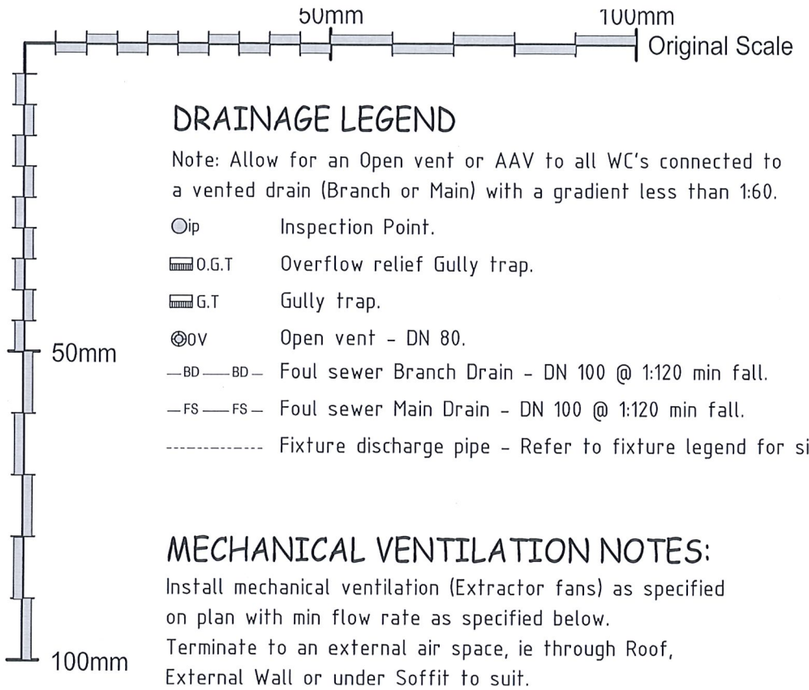

DRAINAGE LEGEND

Note: Allow for an Open vent or AAV to all WC's connected to a vented drain (Branch or Main) with a gradient less than 1:60.

ip	Inspection Point.
O.G.T	Overflow relief Gully trap.
G.T	Gully trap.
OV	Open vent - DN 80.
—BD—BD—	Foul sewer Branch Drain - DN 100 @ 1:120 min fall.
—FS—FS—	Foul sewer Main Drain - DN 100 @ 1:120 min fall.
----------	Fixture discharge pipe - Refer to fixture legend for sizing.

MECHANICAL VENTILATION NOTES:

Install mechanical ventilation (Extractor fans) as specified on plan with min flow rate as specified below.
Terminate to an external air space, ie through Roof, External Wall or under Soffit to suit.

AS 1668.2 Exhaust Rates.
Bathroom & Toilets - 25l/s per Room.
Laundry - 20l/s per Room.
Kitchens - 50l/s per Room.

ELECTRICAL LEGEND

- R - Rangehood Extractor.
- V - Vent - Ceiling extracted.

VENTILATION CALCS SCHEDULE

SPACE NAME	SPACE AREA	JOINERY MARK	NET OPENABLE AREA	VENTILATION % OF FLOOR AREA	VENT REQUIRED
WC	1.81 m²	W06	0.65 m²	35.8%	No

HDC Approved Consent Document (In accordance with BA 2004, Cl. 49(1)) - Processed by : Brenna Ogier - BC No. 200465

SUPERSEDED For amendment 23 Feb 2021 See consent no. 200465A

PLUMBING - FIXTURE SCHEDULE G13 - Mains Pressure

Code	#	Description	Model	Fixture Construction Standards	Pipe DU's	Discharge Pipe Size G13/AS1	Gradient	Individual max unvented discharge pipe length	Min DN Fixture Vent Pipe	HW Pipe ϕ	General Notes
BATH	1	Bath	Astivita Veneto	NZS 2023	4 DU's	DN 40	1:40	3.5m	DN 40	15mm*	*Based on 20max pipe run
DW	1	Dish Washer	Proprietary								Discharge to Sink Trap
S	1	Kitchen Sink	Proprietary	NZS 1730	3 DU's	DN 50	1:40	3.5m	DN 32	15mm*	*10mm for pipe run >12m
SHR	2	Acrylic shower	1000x1000mm	AS3588	2 DU's	DN 40	1:40	3.5m	DN 32	20mm*	*15mm for seperate pipe from HWC to single outlet
Tub	1	Laundry Tub	Proprietary	NZBC G2/AS1	5 DU's	DN 40	1:30	3.5m	DN 32	15mm*	*Based on 20max pipe run.
V	2	Vanity	900x400mm	NZS 1730	1 DU	DN 32	1:20	3.5m	DN 32	10mm*	*Based on 20max pipe run.
WC	2	Toilet	S Trap	G1/AS1	4 DU's	DN 100	1:60	6m	DN 40	N/A	Cisten Flush
WM	1	Washing Machine	Proprietary	~	~	~	0	~	~	~	Discharge to Laundry Tub
Total Fixtures: 11											

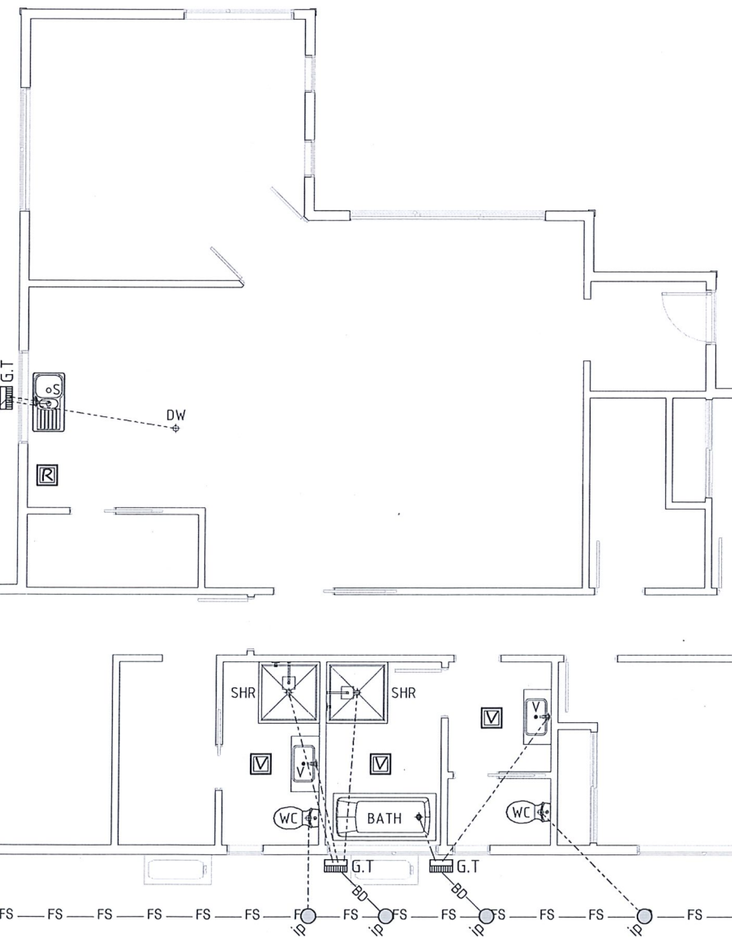

E-one Sewage system

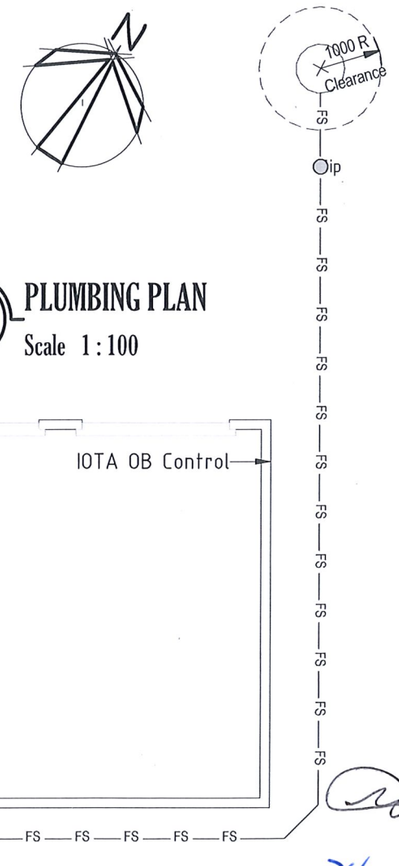

PLUMBING PLAN
Scale 1:100

COPYRIGHT: This drawing remains the property of Trident Homes NZ Ltd and may not be used or reproduced in whole or in part without written permission.

TRIDENT HOMES®
CHRISTCHURCH NORTH

Project : PROPOSED NEW DWELLING for Client : Wendy & Steven Olliver Address : 4 Pukeko Way, Amberley	JOB # : 4_Pukeko	Drw Name : PLUMBING PLAN		Builder.	Client.
	Drawn By : LBP 113870	DATE : NOV 2020	NOTE : do not scale from this drawing.	SCALE @ A3 Sht. As indicated	REV # E	DRW # 09

HDC Approved Consent Document (In accordance with NZBC 2004 CA 49(1)) Processed by: Brenna Ogier - BC No. 200465

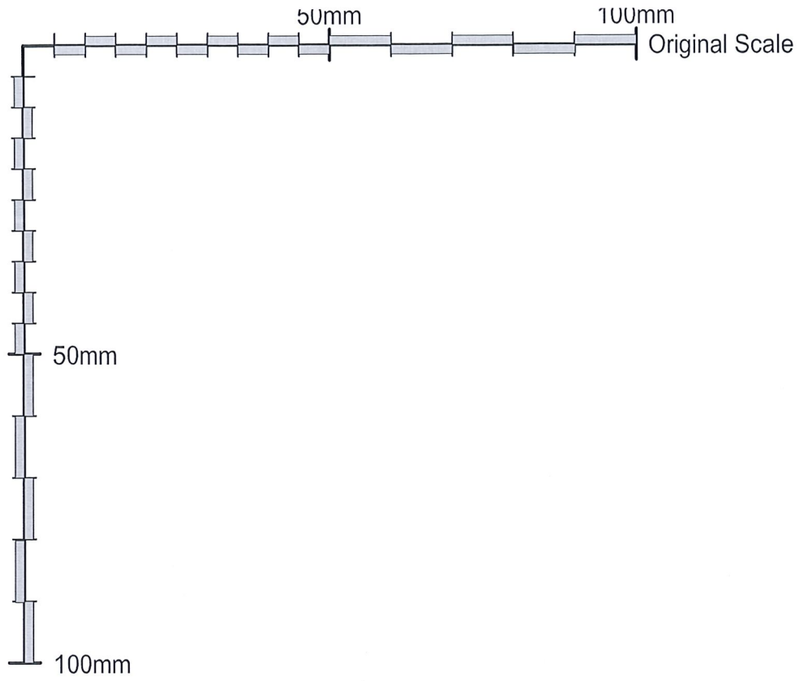

PIPE TRENCH TO BUILDING FOUNDATION RELATIONSHIP.

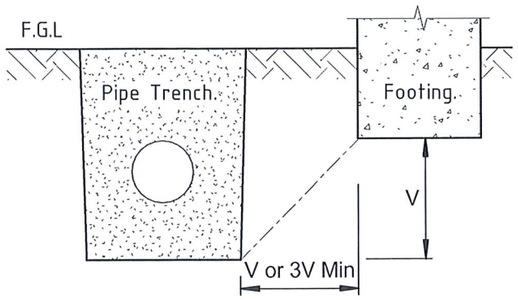

Pipe trenches which are open for no longer than 48 hours shall be located no closer than V to the underside of any building foundation, where the trench is to remain open for periods longer than 48 hours the minimum horizontal separation shall increase to 3V in all ground except rock.

BEDDING & BACKFILLING DETAILS.

Acceptable method for the bedding and backfilling of drainage pipes except where the trench is located within or above peat, Scouring of the trench is likely due to unstable soils, or the cover H to the pipe is more than 2.5m.

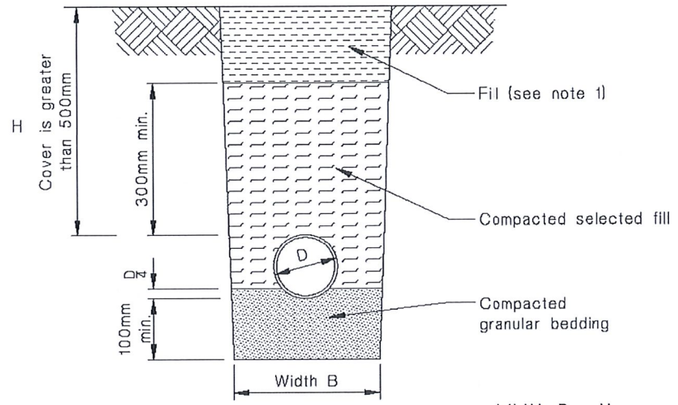

(a) Bedding type 'B' of NZS 7643
Cover greater than 500mm

Width B = No less than pipe dia plus 200mm

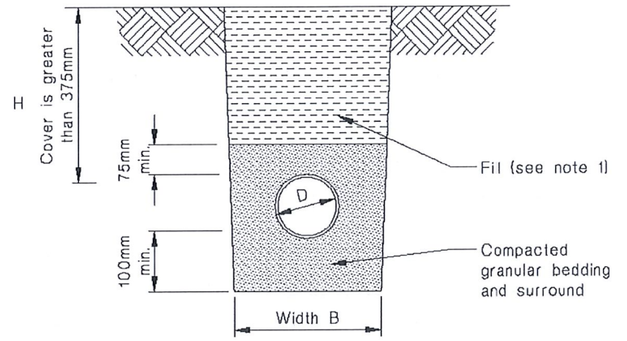

(b) Bedding type 'D' of NZS 7643
Cover greater than 375mm

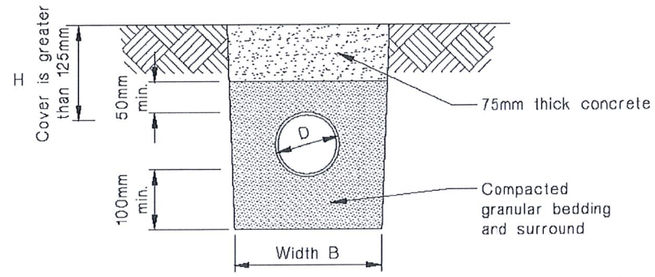

(c) Cover between 125mm and 375mm

Note 1: Fill to be ordinary fill where drain located below gardens and open country, allow for compacted selected fill below residential driveways and similar areas subject to light traffic.

Additional Notes: The trench width at the top of the pipe to be no more than 600mm unless covered with 75mm concrete topping.

TRIDENT HOMES® CHRISTCHURCH NORTH

COPYRIGHT: This drawing remains the property of Trident Homes NZ Ltd and may not be used or reproduced in whole or in part without written permission.

Project : PROPOSED NEW DWELLING for Client : Wendy & Steven Olliver Address : 4 Pukeko Way, Amberley	JOB # : 4_Pukeko	Drw Name : DRAINS IN GROUND			Builder.	Client.
	Drawn By : LBP 113870	DATE : NOV 2020	NOTE : do not scale from this drawing.	SCALE @ A3 Sht. 1 : 10	REV # E	DRW # 10

HDC Approved Consent Document (In accordance with BA 2004, Cl. 49(1)) - Processed by : Brenna Ogier - BC No. 200465

50mm 100mm Original Scale

WIND SPECIFIC FIXING SCHEDULE - HIGH WIND ZONE.

NOTE : Allow for fasteners as specified or alternative fasteners with an equivalent capacity.

Connection / Junction	Required fixing Type or Alternative fixing requirements.
Purlins - Roof framing.	1/10g self drilling screw, 80mm long or 2.4kN alternative fixings.
Trusses - Top plate.	Refer to truss manufacturers specification.
Top plate fixing @ 600crs for Walls & Lintels supporting roof members.	2 / 90x3.15 end nails + 2 wire dogs or 4.7kN alternative fixings or as specified in Rigid Air Barrier Spec.

50mm

100mm

GENERAL SPECIFICATION NOTES:

All construction to comply with the current NZBC, NZS 3604:2011, NZ Metal Roof & Wall Cladding COP, Manufacturers specifications, Other standards where relevant and the local territorial authority requirements.

Do not scale from these drawings.
- All timber to be SG8 unless noted otherwise.
- Allow for DPC separation between all timber and concrete.
- All sheltered Wall and Roof framing to be H1.2 treated.
- Timber cavity battens to be H3.1 treated.
- Radiata Pine Timber reveals to be H3 treated.
- All External finishing timbers to be H3.1 treated and sealed with a protective paint finish.
- Fibre cement external linings to have a protective paint finish.

Where timber members are built up to achieve required thickness eg (2/140x45 to achieve 140x90mm member), they shall be nailed in accordance with NZS3604:2011 2.4.4.7.

All Steel flashings to be 0.55mm Factory Painted Steel. Proprietary Cladding systems with specialized flashings as specified by manufacturer to suit the project corrosion zone as noted on drawings

NOTE : Impervious paint finish must be a quality paint system suitable for the material & environment of use, manufacturers specifications must be followed. Where a protective paint finish is required all surfaces including laps and end grains to be sealed by priming, followed by 2 coats of exterior grade paint to all exposed surfaces.

ROOF STRUCTURE :
Allow for 0.40mm Corrugated Factory Painted Steel roofing on roofing underlay on 70x45mm Purlins @ 900crs max (with end crs of no more than 600mm) on Manufactured Trusses. All roof flashings to be 0.55mm Factory Painted Steel, Colour matched to roof cladding with all softedge pressed to roof profile.

CEILING STRUCTURE :
Allow for 10mm std GIB board linings with R3.6 Glass batt insulation on Direct Fixed GIB Rondo System @ 450crs, Rondo battens to be direct fixed to truss bottom chord with #6 Gib Grabber Scavenger head self tapping screws OR Alternatively pairs of min 45mm x 2.8mm FH nails, with 30mm penetration to truss. Wet areas (Bathroom & Ensuite) to have Aqua GIB linings. All linings to be fixed in accordance with latest Gib technical literature.

GUTTER, FASCIA & SOFFIT :
Allow for Factory Painted Steel downpipes, gutters & fascias. External gutters to be installed to ensure any overflow spills to the outside of the building. Soffit linings to be 4.5min fibre cement board to AS/NZS 2908:Part 2 with Jointers on soffit bearers @ 1200crs max.

WALL STRUCTURE / CLADDINGS :
Allow for Linea weatherboard cladding (Nogs @ 800crs max) over 20nom cavity over 8mm IBS RigidRAP Rigid air barrier on 90x45mm timber studs @ 600crs with R2.6 Glass batt insulation. Allow for 140x35 over 90x45 top plates. Allow for 90x45mm timber studs @ 600crs for internal walls. Allow for DPC Separation between bottom plates and concrete. Insulation not required to Garage space external walls (Excluded from thermal envelope), Insulate garage internal walls with R2.6 Glass batt insulation as specified on floor plan.

Notes: Pipes and services are not permitted to be run within cladding cavities other than passing directly through the cavity to the exterior. Allow for air barrier to Gable ends.

WALL LININGS :
Refer to Inclusion for wall lining requirements.

EXTERNAL WINDOW & DOOR JOINERY :
All joinery to be double glazed Aluminium Joinery unless noted otherwise. Garage Joinery may be Single Glazed.

SUPERSEDED
For amendment
23 Feb 2021
See consent no.
200465A

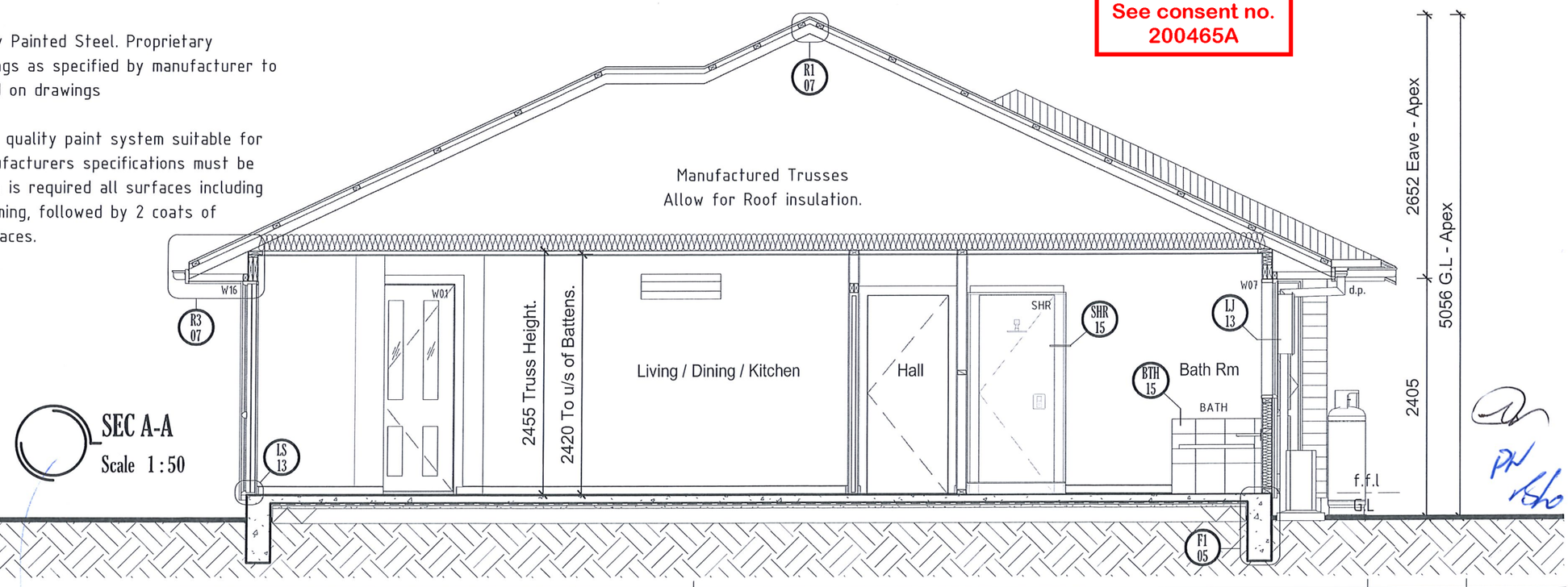

SEC A-A
Scale 1:50

TRIDENT HOMES®
CHRISTCHURCH NORTH

COPYRIGHT: This drawing remains the property of Trident Homes NZ Ltd and may not be used or reproduced in whole or in part without written permission.

Project : PROPOSED NEW DWELLING for Client : Wendy & Steven Olliver Address : 4 Pukeko Way, Amberley	JOB # : 4_Pukeko	Drw Name : SECTION			Builder.	Client.
	Drawn By : LBP 113870	DATE : NOV 2020	NOTE : do not scale from this drawing.	SCALE @ A3 Sht. 1 : 50	REV # E	DRW # 11

HDC Approved Consent Document (In accordance with BA 2004, Cl. 49(1)) - Processed by : Brenna Ogier - BC No. 200465

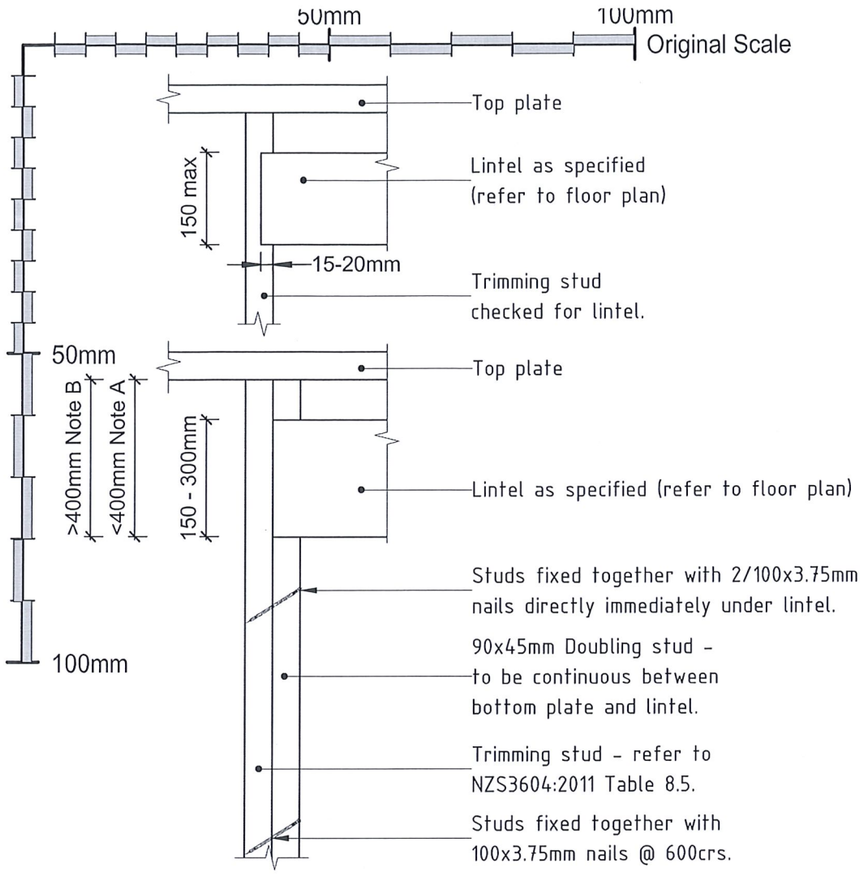

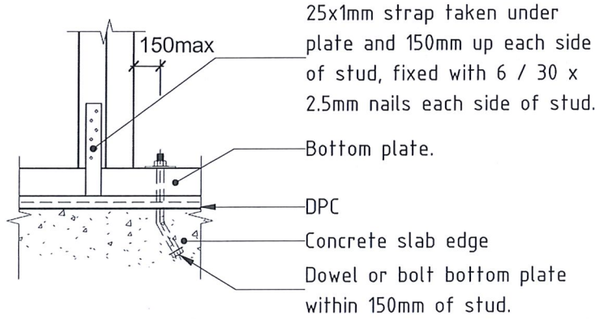

NOTE A - NZS 3604:2011 - Fig 8.5 Trimming stud thickness for lintels up to 400mm below the top plate includes the thickness of the doubling stud for trimming stud thickness.
NOTE B - NZS 3604:2011 - Fig 8.5 Trimming stud thickness for lintels more than 400mm below the top plate does not include the thickness of the doubling stud for trimming stud thickness.

ADDITIONAL NOTES -
Lintels supporting rafters or trusses of roofs shall be secured against uplift where indicated in table 8.14. NZS3604:2011. Allow for fixings for uplift fixings of 7.5kN in tension along line of trimming stud unless specified otherwise. Refer to Project spec for Lumberlok Lintel fixing spec for alternative uplift fixings. Where fixings to resist uplift are not required fix lintel to trimming studs with 3 / 90x3.15 power driven end nails or 2 / 100x3.75mm hand driven end nails.

FIXING OF LINTELS SUPPORTING TRUSSES OR RAFTERS
Scale 1 : 10

Inline joints in top plates where the wall contains bracing elements up to 100 bracing units (BU) per meter, the top plate joint requires a minimum of a 3kN fixing. Inline joints in top plates where the wall contains bracing elements that exceed 100 BU per meter, the top plate joint requires a minimum of a 6kN fixing. Where the wall contains one or more bracing elements, use the value that is required for the top plate jointing that applies to the highest rating bracing element.

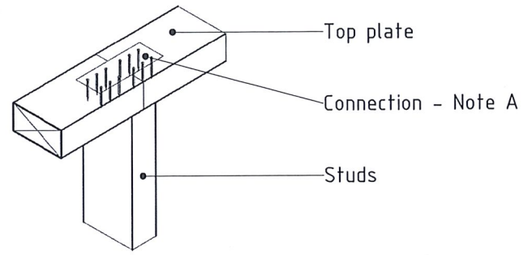

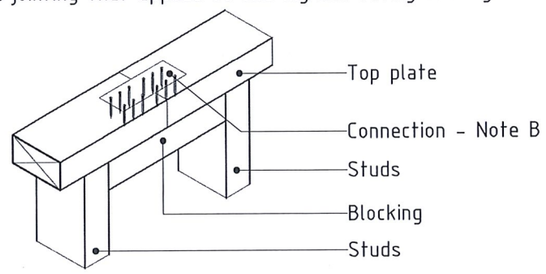

CONNECTION TOP PLATES IN LINE - WALLS CONTAINING BRACING

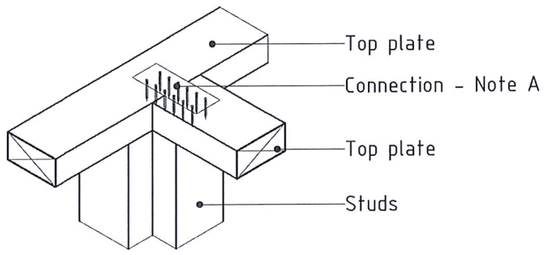

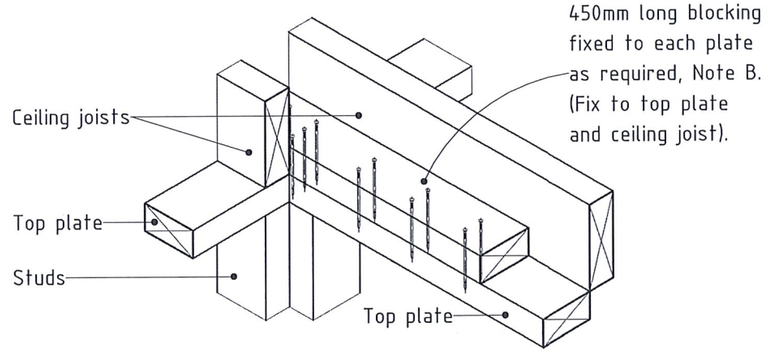

CONNECTION TOP PLATES TO EXTERNAL WALLS AT RIGHT ANGLES - WALLS CONTAINING BRACING

Walls that are at right angles to the external walls require jointing at top plates as follows.
Walls that contain bracing elements of not more than 125 BU's require at least one fixing of 6kN capacity to an external wall. Walls that contain bracing elements that exceed 125 BU and up to 250's BU require a minimum of 6kN connections to two external walls. Walls that contain bracing elements over 250 BU's require a minimum of two connections to external walls, each connection to be a minimum of 2.4 kN per 100 BU's contained in the wall. Fixings can be direct attachment or through framing members in line with wall eg. a truss bottom cord or ceiling joist.

Note A - Up to 3kN - Metal plate with 3 / 30x3.15mm nails per side.
Up to 6kN - Metal plate with 6 / 30x3.15mm nails per side

Note B - Up to 3kN - 3 / 100x3.75mm nails per side.
Up to 6kN - 6 / 100x3.75mm nails per side.

TOP PLATE FIXING FOR WALLS WITH BRACING
Scale : N.T.S

HEAD / SILL TRIMMER NOTES.
Allow for Head trimmers for openings in non load bearing walls.
Allow for Sill trimmers for openings in all walls.
Sill and Head trimmer members to be same width as the studs at the opening and at a thickness of :
45mm for spans up to 2400mm,
90mm (2/45mm members) for spans up to 3000mm,
135mm (3/45mm members) for spans up to 3600mm.

TRIDENT HOMES® CHRISTCHURCH NORTH

COPYRIGHT: This drawing remains the property of Trident Homes NZ Ltd and may not be used or reproduced in whole or in part without written permission.

Project : PROPOSED NEW DWELLING for Client : Wendy & Steven Olliver Address : 4 Pukeko Way, Amberley	JOB # : 4_Pukeko	Drw Name : STRUCTURE DETAILS			Builder.	Client.
	Drawn By : LBP 113870	DATE : NOV 2020	NOTE : do not scale from this drawing.	SCALE @ A3 Sht. As indicated	REV # E	DRW # 12

HDC Approved Consent Document (In accordance with BA 2004, Cl. 49(1)) - Processed by : Brenna Ogier - BC No. 200465

50mm 100mm Original Scale

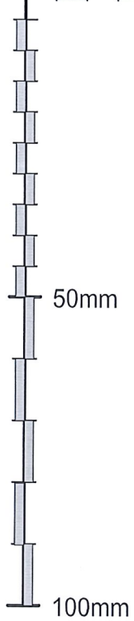

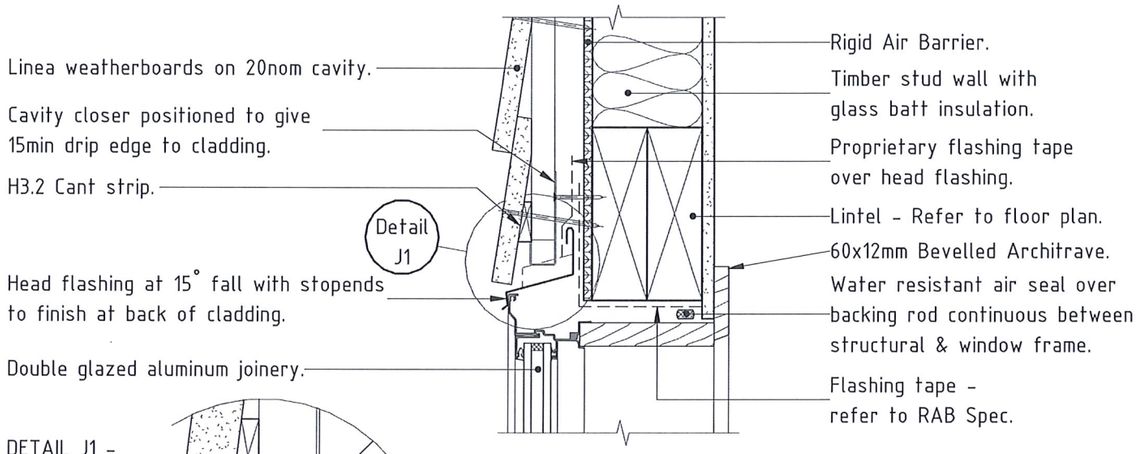

HEAD DETAIL

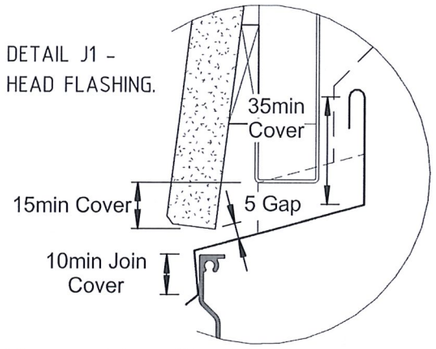

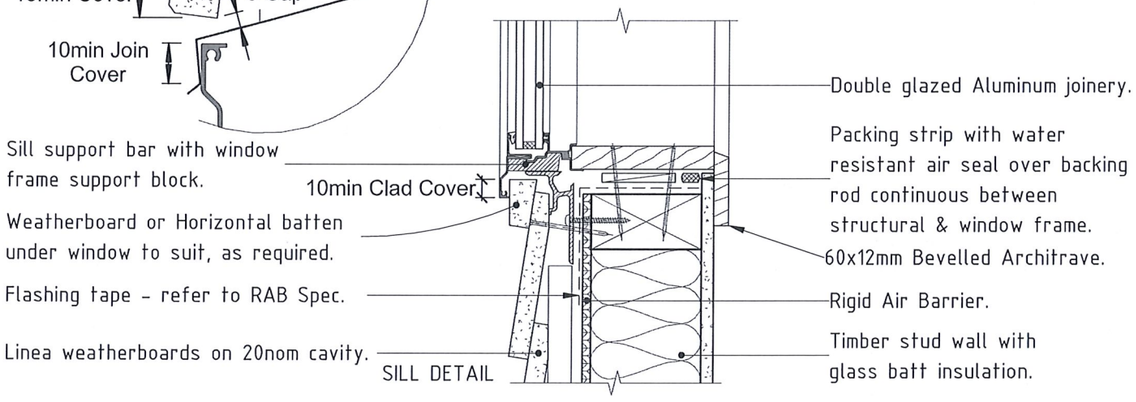

SILL DETAIL

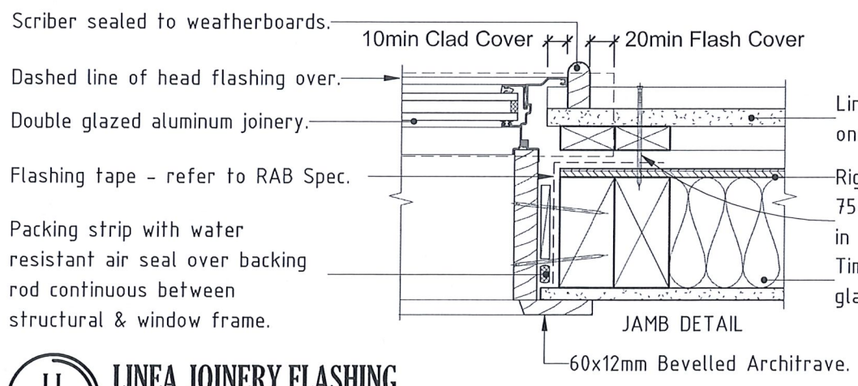

JAMB DETAIL

60x12mm Bevelled Architrave.

LJ LINEA JOINERY FLASHING
Scale 1:5

NOTES: Pre prime all site cut edges prior to installation, seal joints between boards with sealant.

Weatherboards this side scribed & Notched into adjacent weatherboards.

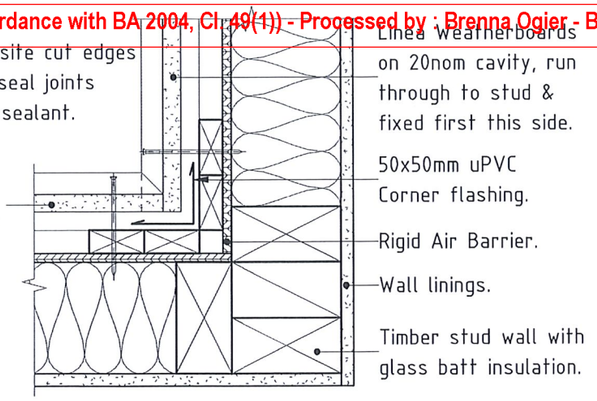

LI LINEA INT CORNER DETAIL
Scale 1:5

Soaker material - Nail material.
Copper - Copper or phosphor bronze.
Aluminum - Hot dip galvanised.
Stainless steel - Stainless steel.

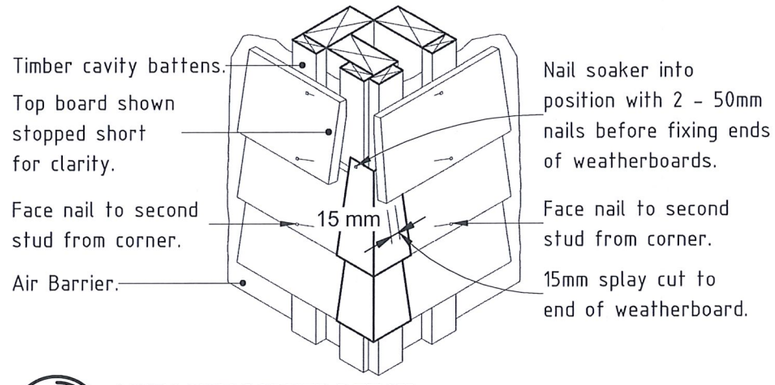

01 LINEA EXT CORNER DETAIL -
Scale : N.T.S

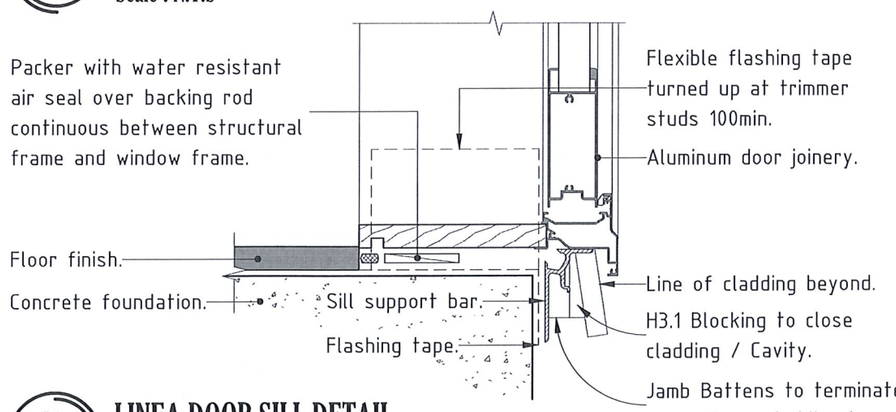

LS LINEA DOOR SILL DETAIL
Scale 1:5

TRIDENT HOMES® CHRISTCHURCH NORTH

COPYRIGHT: This drawing remains the property of Trident Homes NZ Ltd and may not be used or reproduced in whole or in part without written permission.

Project : PROPOSED NEW DWELLING for Client : Wendy & Steven Olliver Address : 4 Pukeko Way, Amberley	JOB # : 4_Pukeko	Drw Name : CLADDING DETAILS			Builder.	Client.
	Drawn By : LBP 113870	DATE : NOV 2020	NOTE : do not scale from this drawing.	SCALE @ A3 Sht. As indicated	REV # E	DRW # 13

HDC Approved Consent Document (In accordance with BA 2004, Cl. 49(1)) - Processed by : Brenna Ogier - BC No. 200465

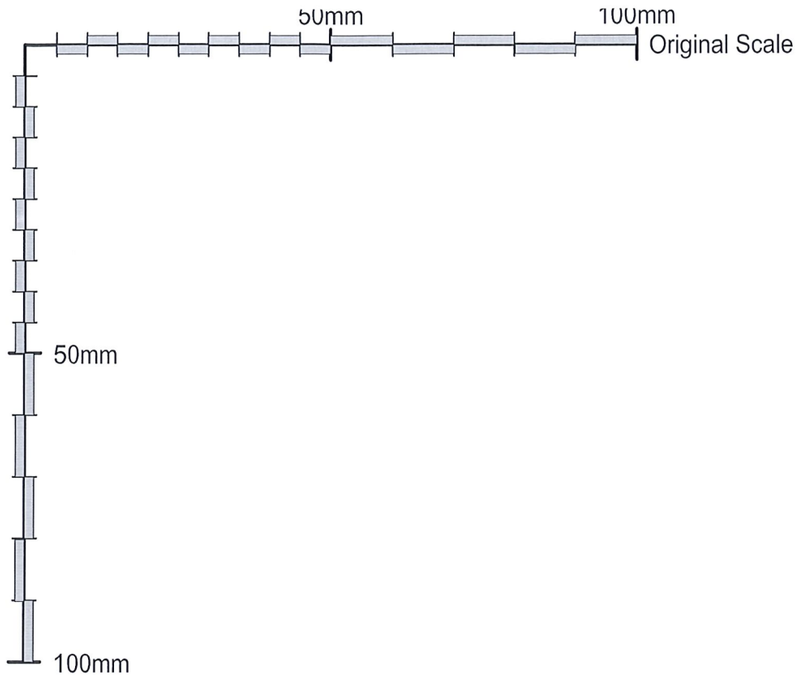

NOTES:
1) Pre-primed scriber to suit weatherboard profile, seal to weatherboards & coverboards with flexible sealant to back and side of scriber, fix with jolt head nails through predrilled holes.
2) Pre prime all site cut edges prior to installation.

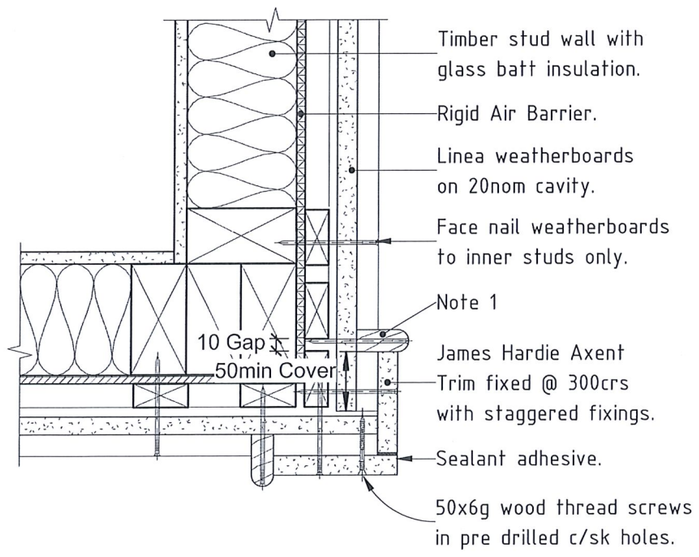

02 LINEA EXT CORNER DETAIL
Scale 1:5

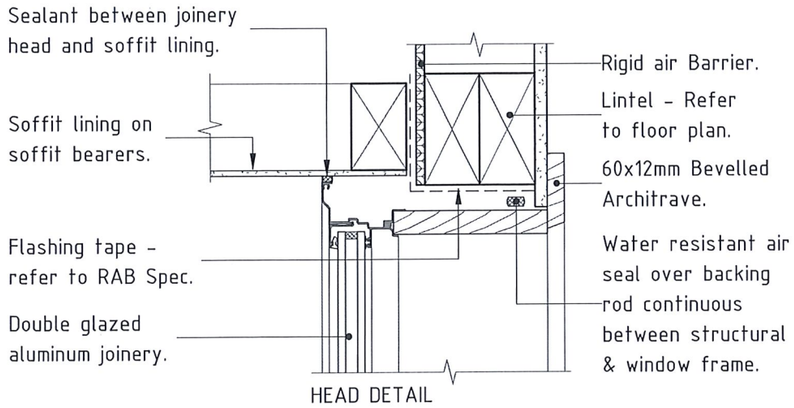

HEAD DETAIL

J1 JOINERY / SOFFIT DETAIL
Scale 1:5

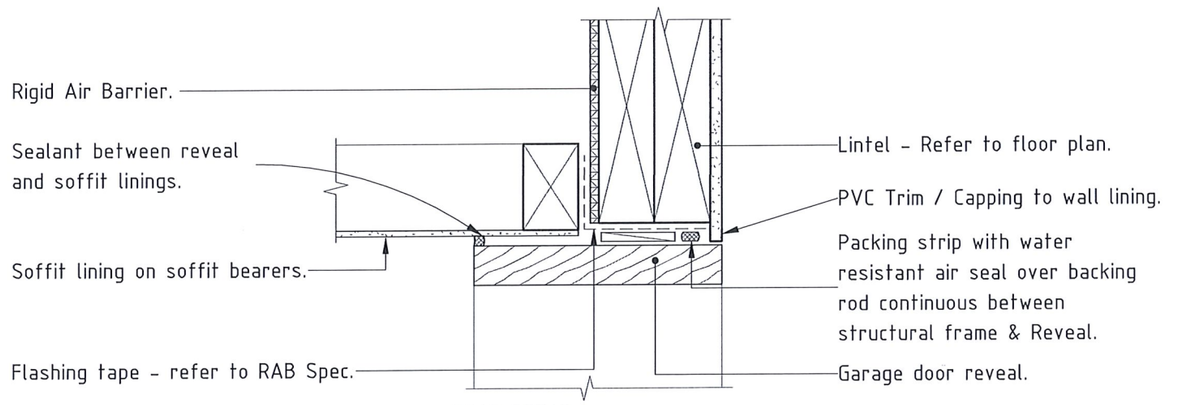

HEAD DETAIL

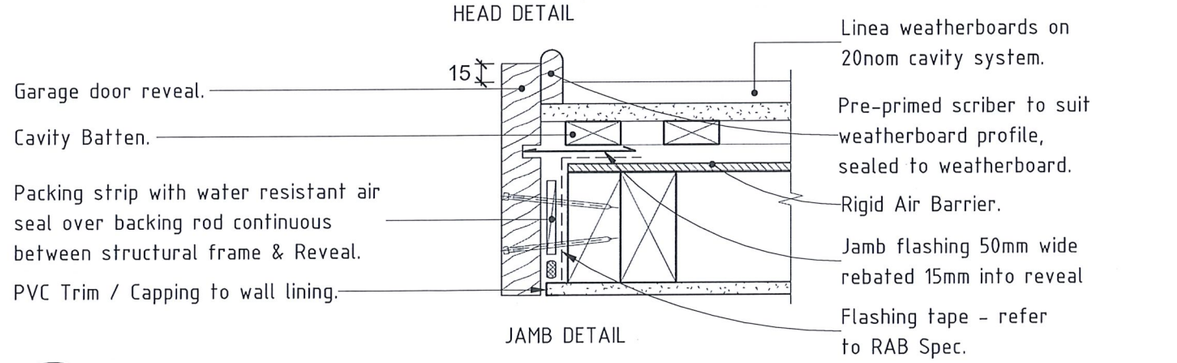

JAMB DETAIL

GD GARAGE DOOR HEAD/JAMB DETAIL
Scale 1:5

TRIDENT HOMES®
CHRISTCHURCH NORTH

COPYRIGHT: This drawing remains the property of Trident Homes NZ Ltd and may not be used or reproduced in whole or in part without written permission.

Project : PROPOSED NEW DWELLING for Client : Wendy & Steven Olliver Address : 4 Pukeko Way, Amberley	JOB # : 4_Pukeko	Drw Name : CLADDING DETAILS			Builder.	Client.
	Drawn By : LBP 113870	DATE : NOV 2020	NOTE : do not scale from this drawing.	SCALE @ A3 Sht. 1 : 5	REV # E	DRW # 14

HDC Approved Consent Document (In accordance with BA 2004, Cl. 49(1)) - Processed by : Brenna Ogier - BC No. 200465

50mm 100mm Original Scale

50mm

100mm

PLUMBER TO ENSURE SHOWER WASTE LINES UP WITH THE WASTE PIPE

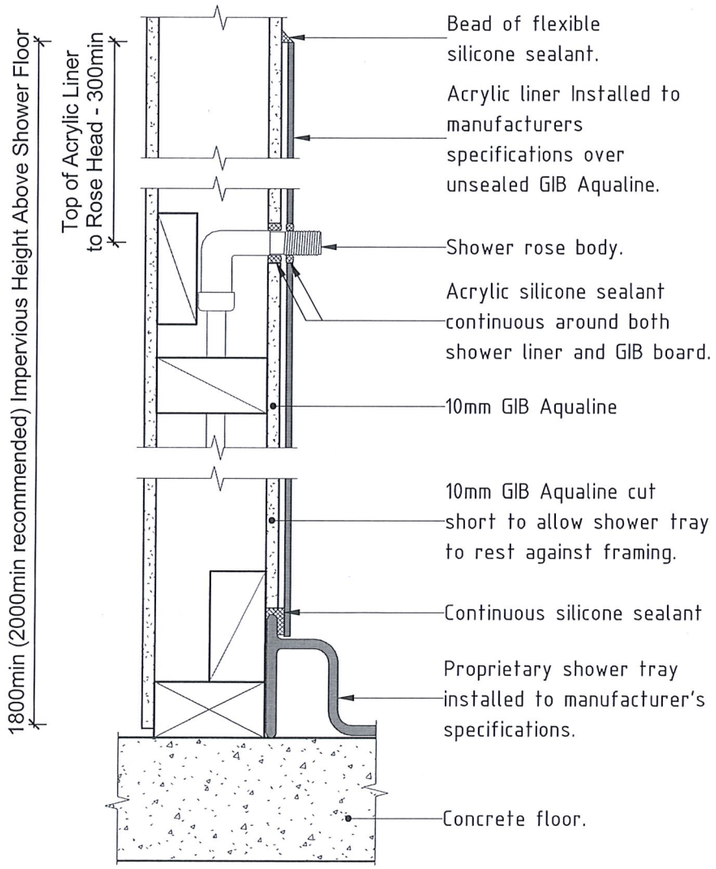

SILICONE SEALANT TO BE APPLIED AROUND PERIMETER OF SHOWER BASE WHERE IT MEETS THE FLOOR AND WALL

SHR ACRYLIC SHOWER DETAIL
Scale 1:5

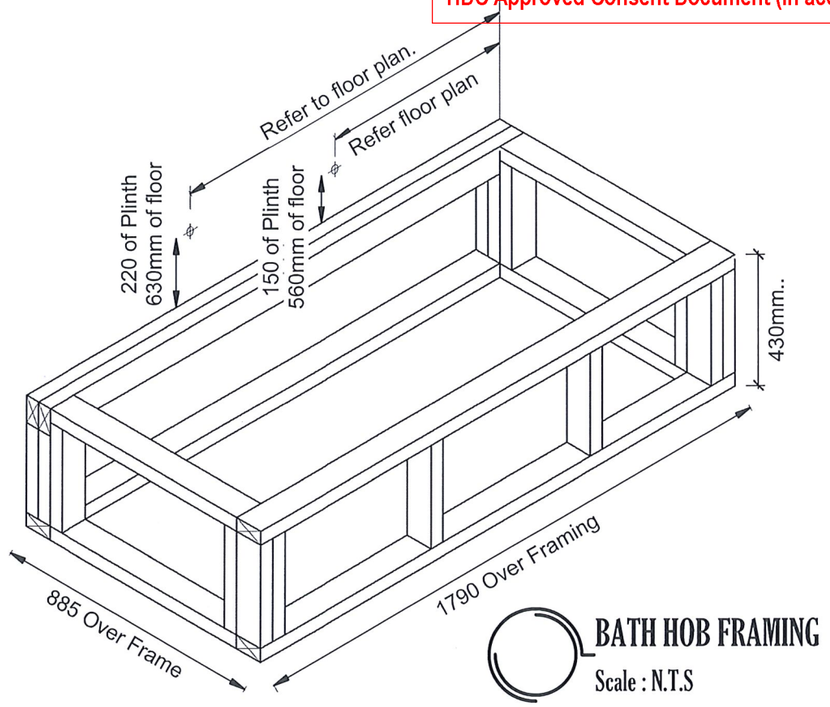

BATH HOB FRAMING
Scale : N.T.S

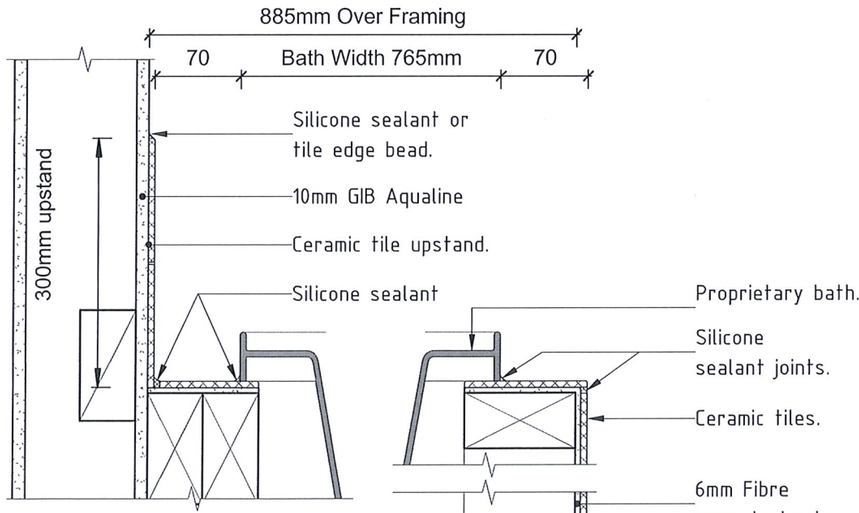

Allow for mortar bed under bath.

PLUMBER TO ENSURE DISCHARGE WASTE PIPE LINES UP WITH THE BATH WASTE PIPE.

BTH BATH DETAIL
Scale 1:5

Wall surfaces adjacent to sanitary fixtures, appliances and areas likely to be splashed or become contaminated must be impervious and easily cleaned as detailed below.

NOTE: Allow for an Ceramic or stone tiles having 6% max water absorption, waterproof grouted joints & bedded with an adhesive specified by the tile manufacturer as being suitable for the tiles, substrate material and the environment of use.

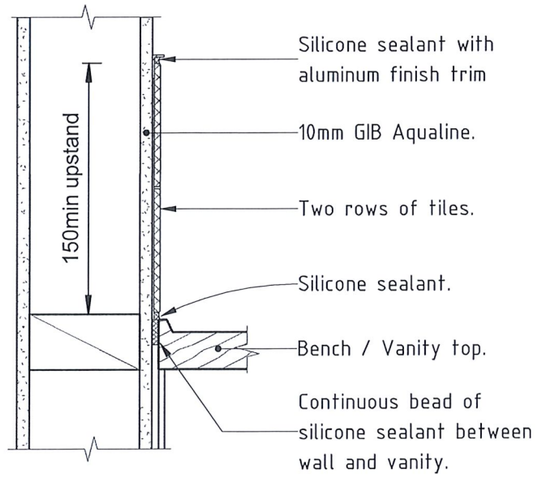

WS WALL SPLASH IMPERVIOUS DETAIL
Scale 1:5

TRIDENT HOMES® CHRISTCHURCH NORTH

COPYRIGHT: This drawing remains the property of Trident Homes NZ Ltd and may not be used or reproduced in whole or in part without written permission.

Project : PROPOSED NEW DWELLING for Client : Wendy & Steven Olliver Address : 4 Pukeko Way, Amberley	JOB # : 4_Pukeko	Drw Name : WET AREA DETAILS			Builder.	Client.
	Drawn By : LBP 113870	DATE : NOV 2020	NOTE : do not scale from this drawing.	SCALE @ A3 Sht. As indicated	REV # E	DRW # 15

HDC Approved Consent Document (In accordance with BA 2004, Cl. 49(1)) - Processed by : Brenna Ogier - BC No. 200465

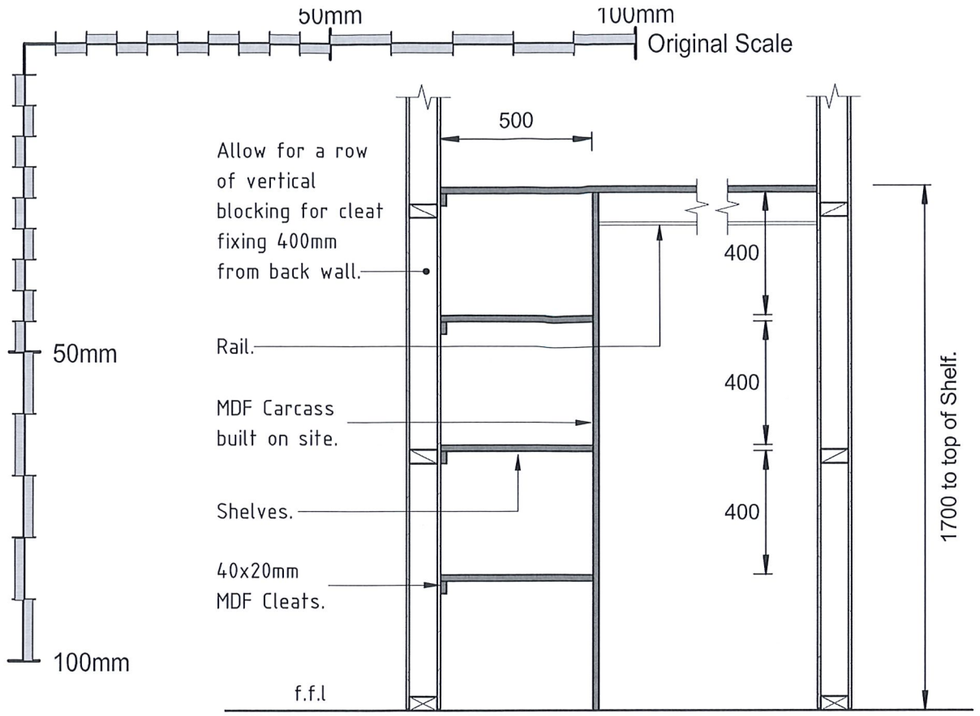

WARDROBE STORAGE UNIT
Scale 1:20

NOTES:
1) Allow for Skirting to face edge of shelving.
2) Allow for Shelving and rail as detailed to all wardrobes, Allow for four shelves only to Hot Water & Storage Cupboards.

ACCESS ROUTE SLIP RESISTANCE.

Allow for a finish to outdoor access routes ie Driveway, Decks & Paths leading to main entrance of dwelling as listed below.
NOTE: Where the surface of an access route is subject to wetting the surface shall have a cross fall of no less than 1 in 100 unless it is constructed to drain water such as timber decking. The surface of any access route shall not have a cross fall steeper than 1:50. Allow for 190 max height from external ground level / walking surface to dwelling f.f.l. adjacent to dwelling access route.

1) Uncoated Profiled timber run adjacent to direction of travel (Allow for coated and sand/grit impregnated for stairs or sloping surfaces subject to wetting).
2) Portland Cement Concrete with a Broomed (Class 5 or 6 complying with NZS 3114), Wood float finish (Class U2), a Coated and sand/grit impregnated finish, Exposed crushed aggregate finish or Exposed rounded aggregate finish (To be tested for compliance) OR
3) Asphaltic Concrete, Marble & Granite with flamed surface, Sandstone or Concrete pavers (Test required for surfaces subject to wetting) OR
4) Other Code compliant finish to D1/AS1 2.0 Access Routes.
NOTE: Finishes above cover Sloping surfaces < 1:10 slope for wet or 1:8 for dry conditions, refer to AS 4586 Appendix F for slip classification for walking surfaces for other slopes.

G8 ARTIFICIAL LIGHT

Allow for lighting on access routes (The continuous route between the Entrance of the building to spaces within the building) with a minimum illuminance of 20 lux, refer to Table 1 G8/AS1 for the total wattage required per m^2 of floor area for Specific Luminaire Types. All electrical work to NZECP 51.
Notes:
1) Incandescent lights with a general diffusing enclosure spaced to achieve $15W/m^2$ will achieve 20 lux for Corridors.
2) Downlights and other luminaires with concentrated or narrow beam distribution, require particular care with spacing, if minimum illuminance criteria are to be met.
3) Downlights to be IC-F, IC, CA-80 or CA-135 rated as specified in AS/NZS 60598.2.2. & Installed to AS/NZS 60598.2.2
4) Allow for an external lighting fixture located to provide adequate lighting to access routes.

FLOOR COVERINGS KEY

No Finish.
Carpet.
Vinyl.

Refer to manufacturers information for installation.

SUPERSEDED
For amendment
23 Feb 2021
See consent no.
200465A

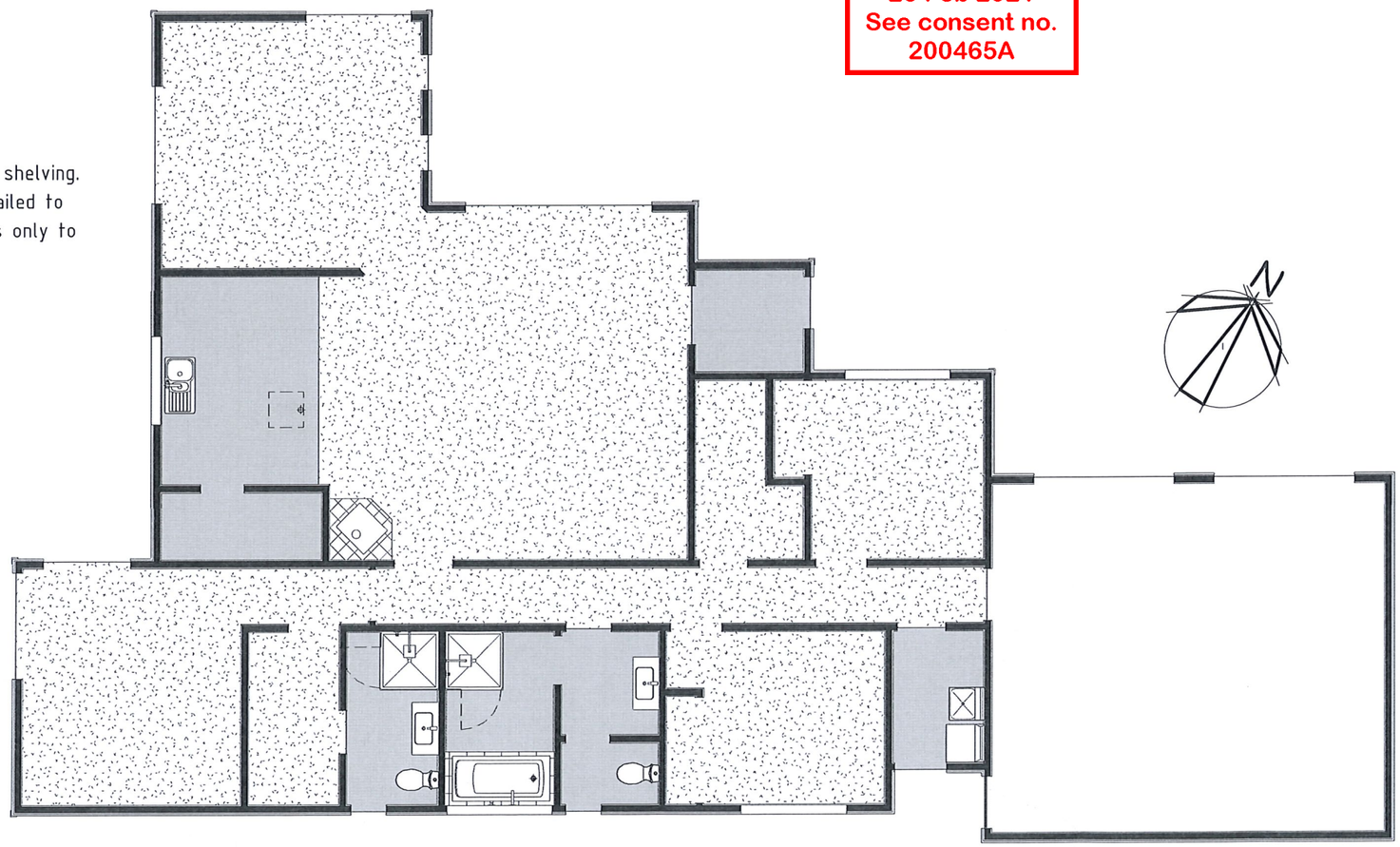

FLOOR COVERINGS PLAN
Scale 1:100

TRIDENT HOMES®
CHRISTCHURCH NORTH

COPYRIGHT: This drawing remains the property of Trident Homes NZ Ltd and may not be used or reproduced in whole or in part without written permission.

Project : PROPOSED NEW DWELLING for Client : Wendy & Steven Olliver Address : 4 Pukeko Way, Amberley	JOB # : 4_Pukeko	Drw Name : FLOOR COVERINGS PLAN			Builder.	Client.
	Drawn By : LBP 113870	DATE : NOV 2020	NOTE : do not scale from this drawing.	SCALE @ A3 Sht. As indicated	REV # E	DRW # 16

HDC Approved Consent Document (In accordance with BA 2004, Cl. 49(1)) - Processed by : Brenna Ogier - BC No. 200465

EXTERNAL JOINERY ELEVATIONS Scale 1:50.

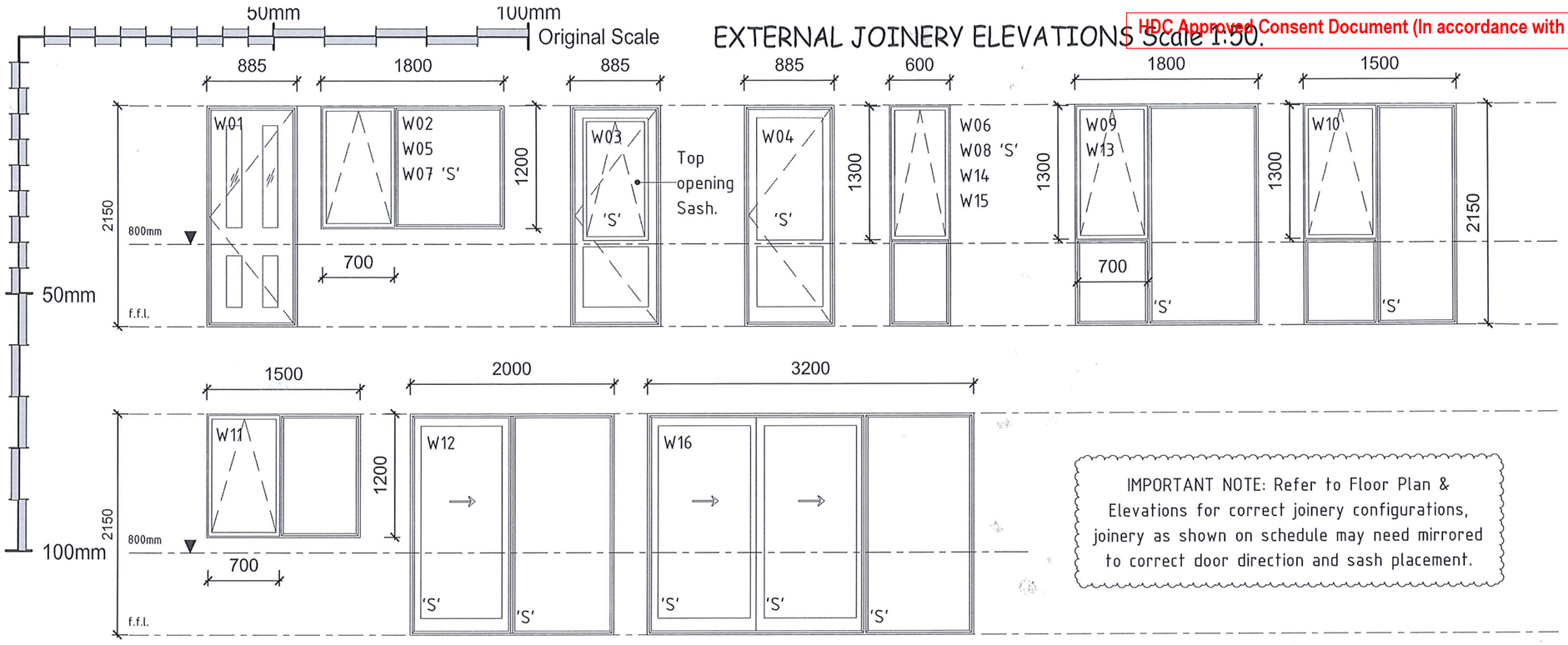

IMPORTANT NOTE: Refer to Floor Plan & Elevations for correct joinery configurations, joinery as shown on schedule may need mirrored to correct door direction and sash placement.

JOINERY SCHEDULE - INTERNAL

Type	Description	Overall Height	Overall Width	Panel Width	#
C-760	Cavity Slider	2000 mm	760 mm	760 mm	3
C-1010	Cavity Slider	2000 mm	1010 mm	1010 mm	1
F-760	Framed Opening	2000 mm	760 mm		1
D-1420	Hinged Double Doors	2000 mm	1420 mm	710 mm	1
D-760	Hinged Single Door	2000 mm	760 mm	760 mm	3
D-810	Hinged Single Door	2000 mm	810 mm	810 mm	4
W-1620	Wardrobe Sliding	2200 mm	1620 mm	810 mm	1
W-1820	Wardrobe Sliding	2200 mm	1820 mm	910 mm	1

JOINERY SCHEDULE - EXTERNAL MASTER

Mark	Model	Width	Height	Lintels	Sill Height	Head Height	Space Name	Space Area	Orientation	Glazing Area	Openable Area	-
GD		2400 mm	2150 mm	190x88 PL8	0 mm	2150 mm	Garage	40.54 m^2	N/A			
GD		2400 mm	2150 mm	190x88 PL8	0 mm	2150 mm	Garage	40.54 m^2	N/A			
W01	0701 0604	885 mm	2150 mm	2/90x45	0 mm	2150 mm	Entry	3.4 m^2	East	1.9 m^2	1.67 m^2	
W02	0035	1800 mm	1200 mm	140x90 PL8	950 mm	2150 mm	Bed Rm 2	9.18 m^2	North	2.16 m^2	0.73 m^2	
W03	0701	885 mm	2150 mm	2/90x45	0 mm	2150 mm	Garage	40.54 m^2	N/A	1.9 m^2	1.67 m^2	
W04	0701s	885 mm	2150 mm	2/90x45	0 mm	2150 mm	Lndry	3.61 m^2	South	1.9 m^2	1.67 m^2	
W05	0035	1800 mm	1200 mm	140x88 PL8	950 mm	2150 mm	Bed Rm 3	9.96 m^2	South	2.16 m^2	0.73 m^2	
W06	0061	600 mm	2150 mm	2/90x45	0 mm	2150 mm	WC	1.81 m^2	South	1.29 m^2	0.65 m^2	
W07	0035	1800 mm	1200 mm	140x88 PL8	950 mm	2150 mm	Bath Rm	5.6 m^2	South	2.16 m^2	0.73 m^2	
W08	0061	600 mm	2150 mm	2/90x45	0 mm	2150 mm	Ens	4.71 m^2	South	1.29 m^2	0.65 m^2	
W09	0065	1800 mm	2150 mm	140x88 PL8	0 mm	2150 mm	Master Bed Rm	22.34 m^2	West	3.87 m^2	0.81 m^2	
W10	0064	1500 mm	2150 mm	140x88 PL8	0 mm	2150 mm	Master Bed Rm	22.34 m^2	North	3.23 m^2	0.81 m^2	
W11	0034	1500 mm	1200 mm	190x88 PL8	950 mm	2150 mm	Living / Dining / Kitchen	45.89 m^2	West	1.8 m^2	0.73 m^2	
W12	0141	2000 mm	2150 mm	140x88 PL8	0 mm	2150 mm	Lounge	18.44 m^2	West	4.3 m^2	1.93 m^2	
W13	0065	1800 mm	2150 mm	140x88 PL8	0 mm	2150 mm	Lounge	18.44 m^2	North	3.87 m^2	0.81 m^2	
W14	0061	600 mm	2150 mm	2/90x45	0 mm	2150 mm	Lounge	18.44 m^2	East	1.29 m^2	0.65 m^2	
W15	0061	600 mm	2150 mm	2/90x45	0 mm	2150 mm	Lounge	18.44 m^2	East	1.29 m^2	0.65 m^2	
W16	0172	3200 mm	2150 mm	240x88 PL8	0 mm	2150 mm	Living / Dining / Kitchen	45.89 m^2	North	6.88 m^2	4.25 m^2	
Grand total: 18										41.29 m^2		

G7 NATURAL LIGHT COMPLIANCE

SPACE NAME	SPACE AREA	TOTAL GLAZING AREA	GLAZING % OF FLOOR AREA
Bed Rm 2	9.18 m^2	2.16 m^2	24%
Bed Rm 3	9.96 m^2	2.16 m^2	22%
Living / Dining / Kitchen	45.89 m^2	8.68 m^2	19%
Lounge	18.44 m^2	10.75 m^2	58%
Master Bed Rm	22.34 m^2	7.1 m^2	32%

EXTERNAL JOINERY NOTES.

All Windows/Doors to be double glazed aluminum unless noted otherwise, joinery excluded from thermal envelope may be single glazed. External Windows and doors shall comply with the requirements of NZS 4211, all joinery dimensions to be confirmed on Site.

Air Seals shall be provided between the reveal or frame and the wrapped opening for wall openings where specified, Installed over a closed cell polyethylene foam (PEF) backing rod or similar, made of self-expanding polyurethane foam or sealant complying with:
a. Type F, Class 20LM or 25LM of ISO 11600, or
b. low modulus Type II Class A of Federal Specification TT-S-00230C.

Flexible flashing tape shall comply with NZBC, be compatible with the building wrap / roof underlay and be used only in fully concealed applications. Sill support bars to comply with BRANZ evaluation method EM6, E2/VM1 and B2/AS1.

Joinery shall be fixed using pairs of 75x3.15mm galvanized jolt head nails or 8 gauge x 65mm stainless steel screws through reveals into surrounding framing at 450max centers all round and within 150mm from reveal ends. Allow for packers between reveals and framing at all fixing points except between head reveals and lintels.

PW SLO

TRIDENT HOMES® CHRISTCHURCH NORTH

COPYRIGHT: This drawing remains the property of Trident Homes NZ Ltd and may not be used or reproduced in whole or in part without written permission.

Project : PROPOSED NEW DWELLING for
Client : Wendy & Steven Olliver
Address : 4 Pukeko Way, Amberley

JOB # : 4_Pukeko
Drawn By : LBP 113870

Drw Name : JOINERY SCHEDULE
DATE : NOV 2020
NOTE : do not scale from this drawing.
SCALE @ A3 Sht. 1 : 50
Builder.
Client.
REV # E
DRW # 17

HURUNUI DISTRICT COUNCIL
P.O. Box 13 | Amberley | 7441 | 66 Carters Road | Amberley | 7410
Phone 03 314-8816 | Fax 03 314-9181 | Email info@hurunui.govt.nz
Web hurunui.govt.nz | facebook.com/HurunuiDistrictCouncil
Skype hdc_customer_services | twitter.com/hurunuidc

Project Information Memorandum 200465

Section 34, Building Act 2004

Issued in accordance with Building Consent No. 200465

This project information memorandum is confirmation that the proposed building work may be undertaken, subject to the provisions of the Building Act 2004, and any requirements of the building consent attached.

This project information memorandum includes:

- Notification of any other authorisations which must be obtained before the proposed building work may be undertaken;

1. Resource consent required for breach of Hurunui District Plan rule 4.6.10 Building length: No wall or ridgeline of any building shall be more than 20 m long without having an offset in plan of at least 2 m or an offset in height of at least 2 m. The building is 23.6m in length with 1.7m offset in height and 1.1m offset in plane. **NO BUILDING WORK TO PROCEED UNTIL ADDRESSED**
2. As per the consent noticed registered against the record of title condition 67c states: A stormwater management plan for the on-site stormwater systems installed under this condition shall be submitted to Council for approval. No management plan provided for onsite stormwater, note this will need to be signed by owners **NO BUILDING WORK TO PROCEED **
3. As per the consent notice registered against the record of title (condition 74) At the time of building on lot 25 an accessway shall be constructed in accordance with Survus Consultants drawing `DD-01 Vehicle Crossing Details`` crossing type B. A bond will need to be entered into with Council or the vehicle crossing constructed to the consent notice requirements prior to building work starting. Please contact the Duty Planner on 314 8816 to arrange a preconstruction meeting before excavation. Note that anyone working in the road reserve will first need to obtain a Works Access Permit (by applying for a Corridor Access permit from Council via the beforeUdig service - apply at beforeUdig.co.nz or ph 0800 248 344). *** VC bond letter sent. NO BUILDING TO PROCEED UNTIL ADDRESSED ***
4. ADVICE NOTE: As per the consent notice registered against the record of title the owners of lot 25 shall be responsible for undertaking all necessary maintenance to meet the requirements of the stormwater management plan for right of way P
5. ADVICE NOTE: As per the consent notice registered against the record of title The owner of the lot shall be responsible for undertaking all necessary maintenance to meet the requirements of the stormwater management plan submitted for the on-site stormwater systems installed under condition 67
6. ADVICE NOTE: As per the consent notice registered against the record of title Lot 25 shall have no direct vehicular access to Amberley Beach Road or Double Corner Road.
7. ADVICE NOTE: As per the consent notice registered against the record of title The owner of the lot shall be responsible for all costs associated with the installation and ongoing operation, repairs and maintenance of the system installed under condition 81
8. STORMWATER: as per the consent notice registered against the record of title lot 25 shall comply with Council`s global stormwater discharge consent (ECan ref CRC082988) and the following shall apply: (b) For on-site soak pits, the following shall apply: - An investigation shall be carried out at each soak pit location to determine the soakage rate and water table depth; - Soak pits shall be designed to cater for runoff from up to and including the 24 hour 10% AEP rainfall event, with allowance made for overflow from up to and including the 24 hour 2% AEP rainfall event; BUILDING OFFICER TO ASSESS COMPLIANCE AT THE TIME OF PROCESSING *** resolved***
9. STORMWATER: as per the consent notice registered against the record of title lot 25 shall comply with Council`s global stormwater discharge consent (ECan ref CRC082988) and the following shall apply: (B) CONTINUED - For soak pits dealing with roof and/or non-trafficable hardstand areas, roofs shall not be zinc-coated (galvanised), and systems shall be sealed to prevent entry of contaminants; - For soak pits dealing with trafficable hardstand areas, soak pit base levels shall be at least 1 metre above the water

table, and pre-treatment shall be provided (e.g. vegetated swales and/or submerged outlet sumps). BUILDING OFFICER TO ASSESS COMPLAINCE AT THE TIME OF PROCESSING *** resolved***

10. WASTEWATER: As per the consent notice registered against the record of title condition 81 states: Lot 25 shall: a) At the time of building on the lots, an approved private in-ground pump unit system (consisting of a heavy duty E/One submersible grinder pump in an underground polyethylene tank, or similar system as approved by Hurunui District Council) shall be installed and connected to the roadside boundary kits to cater for wastewater disposal from the lots BUILDING OFFICER TO ASSESS AT THE TIME OF PROCESSING *** resolved ***
11. Water: Connection to Amberley Township Water supply available on application. $650 fee applies. Completed application received.

    Wastewater: Connection to Amberley Township sewer available on application. $100 fee applies. Completed application received. In ground pump unit required as per RC140160 - approved private in-ground pump unit system (consisting of a heavy duty E/One submersible grinder pump in an underground polyethylene tank, or similar system as approved by Hurunui District Council) shall be installed and connected to the roadside boundary. The boundary kit in the Northern corner will suffice as an inspection chamber.

    Stormwater: To soakpit. Stormwater runoff from buildings and hardstand areas on the lot resulting from up to and including the 24 hour 2% AEP rainfall event shall be managed so that no runoff enters any other property.
12. For on-site soak pits, the following shall apply: * An investigation shall be carried out at each soak pit location to determine the soakage rate and water table depth; * Soak pits shall be designed to cater for runoff from up to and including the 24 hour 10% AEP rainfall event, with allowance made for overflow from up to and including the 24 hour 2% AEP rainfall event; * For soak pits dealing with roof and/or non-trafficable hardstand areas, roofs shall not be zinc-coated (galvanised), and systems shall be sealed to prevent entry of contaminants; * For soak pits dealing with trafficable hardstand areas, soak pit base levels shall be at least 1 metre above the water table, and pre-treatment shall be provided (eg vegetated swales and/or submerged outlet sumps).
13. For a full chemical analysis of your water supply please visit our website: https://www.hurunui.govt.nz/services/things-we-operate/water /water-testing-reports
14. Please note that your water supply is rated as moderately hard. For further information and advice, head to our website: https://www.hurunui.govt.nz/services/things-we-operate/water /hard-water
15. This structure must withstand the following:

    Wind Region: A

    Snow zone: N4 - Altitude: 40

    Earthquake Zone: 3

    Exposure zone: C

    Liquefaction Zone: 3

Signature _____ Position ___Building Administration Officer____

On behalf of: Hurunui District Council

Date: 26/01/21

HURUNUI DISTRICT COUNCIL
P.O. Box 13 | Amberley | 7441 | 66 Carters Road | Amberley | 7410
Phone 03 314-8816 | Fax 03 314-9181 | Email info@hurunui.govt.nz
Web hurunui.govt.nz | facebook.com/HurunuiDistrictCouncil
Skype hdc_customer_services | twitter.com/hurunuidc

Required Items for Building Consent No 200465
Proposal: New residential dwelling
Site Address: 4 Pukeko Way, Amberley

Before Council can issue a Code Compliance Certificate, you will need to ensure the following inspections are completed and that you have provided the paperwork requested.

Inspections Required

1 Foundation - Concrete footings
1 Foundation - Slab
1 Pre-Roof
1 Pre-Cladding - Wrap
1 Pre-Cladding - Mid Cladding
1 Pre-Line
1 Pre-Stop
1 Drains
1 Final - Residential
9 Total Inspections

Documentation Required

Application for CCC
Electrical safety certificate (itemised)
Gas safety certificate
As-built drainage plan
Plumbers pressure test declaration
Design statement (truss manufacturer)
Design statement (frame manufacturer)
Under-slab hardfill compaction certificate

Licensed Building Practitioner Forms Required

Designer Justin Hannon - Received
Carpentry
Foundations
Roofing

Your application for Code Compliance Certificate and all requested documents will be required prior to booking a final inspection.

How do I book an inspection?

- Please give at least 72 hours notice prior to any inspection

- HDC will make every attempt to book inspections when required. However, this is not always possible - flexibility is often required. Please note that inspections are not available in all areas every day, please check the table below to see when an inspector will be in your area

- When you call to book an inspection, please supply: Your building consent number, site address, type of inspection, contact name and phone number

- To make a booking for inspection, email building@hurunui.govt.nz or telephone 03 314 8816

- Standard inspections are included in the consent fee.

Hurunui District Council Building Inspection - days/areas

- Amberley/Leithfield/Waipara areas:	Monday - Friday, all days
- Hanmer Springs/Waiau/Culverden/Waikari areas:	Monday, Wednesday, Friday
- Omihi/Scargill/Cheviot/Parnassus areas:	Tuesday & Thursday

What does the inspector require on site?

- The council approved building consent documents must be on site at the time of the inspection

- The work to be inspected must be completed

- Once the inspection is completed, the inspector will email a copy of the site notice to the email address provided

What happens when the building project is finished?

On completion of the project, please download and complete the Code Compliance Application (Form 6) and arrange for a final inspection. The Form 6 is an important legal document and indicates that consented building work has been completed in accordance with the consent documents

We look forward to working with you during the construction of your project. Please feel free to contact the Hurunui District Council Building Department to discuss any aspect of your project. Our contact details are Ph: 03 314 8816 or email: building@hurunui.govt.nz.

HURUNUI DISTRICT COUNCIL
P.O. Box 13 | Amberley | 7441 | 66 Carters Road | Amberley | 7410
Phone 03 314-8816 | Fax 03 314-9181 | Email info@hurunui.govt.nz
Web hurunui.govt.nz | facebook.com/HurunuiDistrictCouncil
Skype hdc_customer_services | twitter.com/hurunuidc

Form 4

Certificate attached to Project Information Memorandum 200465

Section 37, Building Act 2004

Restrictions on commencing building work under the Resource Management Act 1991

The building work referred to in the attached project information memorandum is also required to have the following resource consents under the Resource Management Act 1991:

- Resource consent required for breach of Hurunui District Plan rule 4.6.10 Building length: No wall or ridgeline of any building shall be more than 20 m long without having an offset in plan of at least 2 m or an offset in height of at least 2 m. The building is 23.6m in length with 1.7m offset in height and 1.1m offset in plane. **NO BUILDING WORK TO PROCEED UNTIL ADDRESSED**
- As per the consent noticed registered against the record of title condition 67c states: A stormwater management plan for the on-site stormwater systems installed under this condition shall be submitted to Council for approval. No management plan provided for onsite stormwater, note this will need to be signed by owners **NO BUILDING WORK TO PROCEED **
- As per the consent notice registered against the record of title (condition 74) At the time of building on lot 25 an accessway shall be constructed in accordance with Survus Consultants drawing `DD-01 Vehicle Crossing Details`` crossing type B. A bond will need to be entered into with Council or the vehicle crossing constructed to the consent notice requirements prior to building work starting. Please contact the Duty Planner on 314 8816 to arrange a preconstruction meeting before excavation. Note that anyone working in the road reserve will first need to obtain a Works Access Permit (by applying for a Corridor Access permit from Council via the beforeUdig service - apply at beforeUdig.co.nz or ph 0800 248 344). *** VC bond letter sent. NO BUILDING TO PROCEED UNTIL ADDRESSED ***
- STORMWATER: as per the consent notice registered against the record of title (condition 67) Lots 25 - 32 shall comply with Council`s global stormwater discharge consent (ECan ref CRC082988) and the following shall apply: a) At the time of building on the lots, stormwater runoff from buildings and hardstand areas on the lots resulting from up to and including the 24 hour 2% AEP rainfall event shall be managed so that no runoff enters any other property;BUILDING OFFICER TO ASSESS AND CONFIRM COMPLIANCE AT THE TIME OF PROCESSING *** Resolved ***
- STORMWATER: as per the consent notice registered against the record of title lot 25 shall comply with Council`s global stormwater discharge consent (ECan ref CRC082988) and the following shall apply: (b) For on-site soak pits, the following shall apply: - An investigation shall be carried out at each soak pit location to determine the soakage rate and water table depth; - Soak pits shall be designed to cater for runoff from up to and including the 24 hour 10% AEP rainfall event, with allowance made for overflow from up to and including the 24 hour 2% AEP rainfall event; BUILDING OFFICER TO ASSESS COMPLIANCE AT THE TIME OF PROCESSING *** Resolved ***
- STORMWATER: as per the consent notice registered against the record of title lot 25 shall comply with Council`s global stormwater discharge consent (ECan ref CRC082988) and the following shall apply: (B) CONTINUED - For soak pits dealing with roof and/or non-trafficable hardstand areas, roofs shall not be zinc-coated (galvanised), and systems shall be sealed to prevent entry of contaminants; - For soak pits dealing with trafficable hardstand areas, soak pit base levels shall be at least 1 metre above the water table, and pre-treatment shall be provided (e.g. vegetated swales and/or submerged outlet sumps). BUILDING OFFICER TO ASSESS COMPLAINCE AT THE TIME OF PROCESSING *** Resolved ****
- WASTEWATER: As per the consent notice registered against the record of title condition 81 states: Lot 25 shall: a) At the time of building on the lots, an approved private in-ground pump unit system (consisting of a heavy duty E/One submersible grinder pump in an underground polyethylene tank, or similar system as approved by Hurunui

District Council) shall be installed and connected to the roadside boundary kits to cater for wastewater disposal from the lots BUILDING OFFICER TO ASSESS AT THE TIME OF PROCESSING *** resolved ***

As these resource consents will or may materially affect the building work to which the attached project information memorandum relates, until they have been granted no building work may proceed.

Failure to comply with the requirements of this notice may result in legal action being taken against you under the Resource Management Act 1991.

Signature:  Position: Building Administration Officer

On behalf of: Hurunui District Council

Date: 14/12/20



Small construction sites

THE ABSOLUTELY ESSENTIAL HEALTH AND SAFETY TOOLKIT

WORKSAFE

ABOUT THIS TOOLKIT

This toolkit[1] provides useful checklists for common health and safety issues on small construction sites. It will help you manage or avoid these issues to ensure the health and safety of everyone on and around your worksite, including workers, clients and members of the public. Links to more detailed advice are included where relevant.

Doing nothing is not an option

Construction is among the top four sectors for highest worker injury rates. Worker fatalities are more than double the average for all other sectors. The most common injuries are ones to the lower back and spine. The most common cause of serious harm injuries are slips, trips and falls from height. Males aged 20-24 are most likely to be injured.

The costs of workplace injuries to New Zealand business are substantial – ACC pay more than $100 million dollars per year in the construction sector. The direct and indirect costs of all workplace injuries in New Zealand are over $1.3 billion.

Make use of this toolkit. If we all work together we can make the construction industry a healthier and safer place to work in.

Health and safety legislation

The Health and Safety at Work Act 2015 (HSWA) is New Zealand's key work health and safety law. It introduces new responsibilities for managing the work related risks that can cause serious injury, illness or even death.If you have good health and safety practices in place now, you are likely to be well on your way. However the new Act introduces some new features and it's important for you to review your approach to work health and safety.

How to contact WorkSafe

For further advice on health and safety at work, contact the WorkSafe Response Team on (freephone) **0800 030 040**.

[1] The content in this toolkit has been adapted from the Health and Safety Executive publication *The absolutely essential health and safety toolkit for the smaller construction contractor* published in 2008 and available at www.hse.gov.uk
It does not cover legal requirements and is a guide only; for information on how to comply with the law, see the relevant legislation at www.legislation.govt.nz

CONTENTS

1.0 **General managment** 2

1.1 Managing a small construction site 3

1.2 When to notify WorkSafe 4

1.3 Contracting and subcontracting 4

2.0 **Health and safety checklist** 5

2.1 Site and services 6

2.2 Working at height 8

2.3 Moving material 10

2.4 Working with vehicles and machinery 11

2.5 Critical health risks 12

2.6 Worker wellbeing 14

2.7 Emergency situations 15

1.0 General management

IN THIS SECTION:

1.1 Managing a small construction site

1.2 When to notify WorkSafe

1.3 Contracting and subcontracting

1.1 Managing a small construction site

The checklists below cover some things to consider when managing a small construction site under the Health and Safety at Work Act 2015 (HSWA) which will imposes duties on the 'PCBU'.

What is a PCBU?

The HSWA defines 'PCBU'. It is essentially a person conducting a business or undertaking, whether alone or with others and whether for profit or gain or not. The PCBU is in the best position to control risks to work health and safety. This is why the PCBU has the primary duty to ensure health and safety.

Despite its name, a PCBU can be a business entity, such as a company, as well as an individual person. An individual person will generally be a PCBU if they are a sole trader or a self-employed person.

Examples of a PCBU include:

- a manufacturing business
- an import business
- an owner-driver of their own courier business
- a self-employed person operating their own business
- a partnership
- a building company, whether a principal contractors or a sub-contractors
- a not-for-profit organisation that employs admin staff.

PCBUs have a number of duties under the Health and Safety at Work Act. PCBUs with overlapping duties must work together to achieve health and safety at work.

Keep this in mind when reading the checklists. Many of the things covered in this booklet will help PCBUs to meet their duties under the HSWA.

See the WorkSafe website for more information.

Do you make sure workers:

- are trained, competent and fit to do the job safely and without putting their own or others' health and safety at risk?
- are properly supervised and given clear instructions?
- have access to washing and toilet facilities?
- have the right tools, equipment, plant and personal protective equipment?
- are involved in discussions about health and safety issues?
- are given opportunities to participate in improving health and safety?



1.2 When to notify WorkSafe

In an emergency: *call the emergency services by dialling **111***.

A PCBU must notify WorkSafe as soon as possible if any of the following 'notifable events' occur:

- the death of a person
- a notifiable injury or illness
- notifiable incident.

Call the WorkSafe Response Team on freephone **0800 030 040** (24 hours) and choose option 1.

Fill in and submit a notification form within seven days at worksafe.govt.nz *Reporting: Serious Harm*.

Some types of work also require you to notify WorkSafe. These include where a worker could fall 5 m or more, some excavation work, working involving asbestos or working underground. For a full list of notifiable work and more information on notifable events, see the WorkSafe website.

For a hazardous substances emergency: call the New Zealand Fire Service on 111 and then the WorkSafe Response Team directly on 0800 030 040.

DON'T DISTURB THE SCENE

You must not interfere with an accident scene until authorised by a health and safety inspector. Exceptions include certain situations, such as when people or property are at risk. If you require scene clearance or other immediate assistance from a health and safety inspector, call WorkSafe on 0800 030 040.

1.3 Contracting and subcontracting

When contracting or subcontracting work do you:

- check the health and safety performance of the people you plan to use?
- give them the health and safety information they need for the work?
- talk about the work with them?
- hold regular discussions about how the work is going, including safety problems and concerns?
- make sure that you have provided everything you agreed (eg safe scaffolds, the right plant, access to toilets and other welfare facilities, etc)?
- check their performance and remedy any shortcomings?

For more information for PCBUs check for updates on the WorkSafe and New Zealand Legislation websites:

worksafe.govt.nz

www.legislation.govt.nz

2.0 Health and safety checklist

IN THIS SECTION:

2.1 Site and services

2.2 Working at height

2.3 Moving material

2.4 Working with vehicles and machinery

2.5 Critical health risks

2.6 Worker wellbeing

2.7 Emergency situations

The following pages provide you with an essential checklist of some of the hazards most commonly found on construction sites.

The questions will help you decide whether your site is a safe and healthy place to work. It is not a full list.

2.1 Site and services

Access on site

- Can everyone get to their place of work safely – and work there safely?
- Are access routes in good condition and clearly signposted?
- Do edges that people could fall from have suitable edge protection?
- Are holes protected with clearly marked and fixed covers to prevent falls?
- Is the site tidy, and are materials stored safely?
- Is lighting good enough?



Electricity and other services

- Have all necessary services been provided on site before work begins? Have you also identified existing services present on site (eg electric cables or gas mains) and taken effective steps, if necessary, to prevent harm from them?
- Is the supply isolated from earth with a voltage between phase and earth conductors not exceeding 230 volts?
- Are electrical extension cords connected to power tools using a Residual Current Device (RCD) or Isolating Transformer?

- Are cables and leads protected from damage?
- Are all connections to the system properly made and are suitable plugs used?
- Are tools and equipment checked by users, visually examined on site and regularly inspected and tested by a competent person?
- Have hidden electricity cables and other services been located (eg with a locator and plans) and marked, and have you taken precautions for safe working?
- Where there are overhead lines, has the electricity supply been turned off, or have other precautions been taken, such as providing 'goal posts' or taped markers?



Protecting the public

- Is the worksite fenced off from the public?
- Do roadworks have barriers around them and are the barriers lit?
- Are the public protected from falling material?
- Is clear signage present to warn people of danger (eg 'Keep out', 'Asbestos removal in progress')?

When work has stopped for the day:

- is the boundary secure?
- have steps been taken to prevent any unauthorised access (eg are all ladders removed or their rungs boarded so they can't be used)?
- are excavations and openings securely covered or fenced off?
- is all plant immobilised to prevent unauthorised use?
- are bricks and materials safely stacked?
- are flammable or dangerous substances locked away in secure storage places?



2.2 Working at height

- Have you ensured there is appropriate and fit-for-purpose means to prevent workers from falling from height?
- Have you planned the work properly and identified suitable precautions to make sure work can be carried out safely?
- Have you thought about whether you can avoid working at height by using different equipment or a different work method?
- Can you use equipment that will prevent a fall from happening, such as scaffolding or a mobile elevating work platform?
- Can you put in place measures to reduce the distance and consequences of a fall should one happen, such as nets, soft landing systems or personal fall prevention and protection equipment (eg a harness system)?
- Will the weather conditions threaten the health and safety of those carrying out the work?
- Have you thought about all the options and are you certain that you are gaining access to height using the safest means possible?

For more information, see worksafe.govt.nz

Scaffolds

- Are scaffolds erected, altered and dismantled by competent people?
- Are all uprights provided with base plates (and, where necessary, timber soleboards)?
- Are all uprights, ledgers, braces and out riggers in position?
- Is the scaffold secured to the building or structure in enough places to prevent collapse?
- Are there double guard rails and toe boards, or other suitable protection, at every edge to prevent falling?
- Are additional guards provided to prevent stacked materials such as bricks falling from scaffolds (eg kickboards, toeboards or screens)?
- Are the working platforms fully planked, and are the planks arranged to avoid tipping or tripping?
- Are there effective barriers or warning notices in place to stop people using an incomplete scaffold (eg where working platforms are not fully planked)?
- Is the scaffold strong enough to carry the weight of materials stored on it and are these evenly distributed?



- Are scaffolds being properly maintained?
- Does a competent person inspect the scaffold or proprietary mobile scaffold regularly (eg at least once a week; and always after it has been altered, damaged and following bad weather)?
- Are the results of inspections recorded?
- Are scaffolds erected using using safe work methods, and are they being used according to the supplier's and/or manufacturer's instructions?
- Have the wheels of mobile scaffolds been locked when in use and are the platforms empty when they are moved?
- Are gates (including guardrails being used as gates) and hatches across access points self-closing?
- Are working platforms placed as close as practicable to the working face to reduce the risk of people or materials falling through the gap?

For more information see worksafe.govt.nz

Ladders

- Choose the right tool for the job – can you buy or hire some alternative equipment that would provide a safer means of access?
- Are they in good condition?
- Do ladders rest against a solid surface and not on fragile or insecure materials?



- Are ladders secured at the top and bottom to prevent them slipping sideways and outwards?
- Do ladders rise at least a metre above the landing place? If not, are there other handholds available?
- Are the ladders positioned so that users don't have to overstretch?
- Do you have to use the top three rungs of a stepladder? If so your stepladder is too short.
- Is the user competent? Those using ladders should be trained to use the equipment safely.
- Can users maintain three points of contact at all times?
- Are materials being transported safely (ie not carried up a ladder)? Carrying materials up a ladder increases the risk of falling.

For more information see worksafe.govt.nz

Roofwork

- Is there edge protection to stop people or materials falling?
- Where nets are used, have they been installed properly?
- Have you identified brittle roof materials, such as cement sheets and roof lights?
- Have you taken precautions to stop people falling through fragile materials when working on the roof (eg by providing barriers, covers or working platforms)?
- Are people kept away from the area below the roof work?
- Are roofworkers trained and experienced to recognise the risks and are they competent to do the work?

For more information see worksafe.govt.nz

2.3 Moving material

Manual handling

- Are there heavy materials such as roof trusses, steel beams, kerbstones or bagged products that could cause injury if they have to be moved by hand?
- If so, can you:
  - choose lighter materials?
  - use trolleys, hoists, telehandlers and other plant or equipment so that manual lifting of heavy objects is kept to a minimum?
  - order materials such as cement and aggregates in units that are a manageable weight (eg 25 kg bags)?
  - avoid the repetitive laying of heavy building blocks or other masonry units (eg weighing more than 20 kg)?
- Have people been instructed and trained how to use lifting aids and other handling equipment safely?
- Have people been trained how to lift safely?

For more information see worksafe.govt.nz



Loading and unloading goods

- Have you checked that the load has not moved or destabilised during the journey to site?
- Is there an exclusion zone around the loading/unloading area to keep people who are not involved away from the work?
- Have you planned your method of unloading?

- Does your lifting equipment have a current annual certificate?
- Do you have to access the back of the truck at all, or can the preparation work be done from ground level? If not:
  - do you have a safe way of getting up and down from the back of the vehicle?
  - what do you have in place to prevent workers from falling off the back of the vehicle?
  - are your employees provided with sensible safety footwear with a good grip?

For more information see worksafe.govt.nz

Excavations

- Is the stability of the ground known to ensure against collapse? Or if the stability of the ground is not known, is there a support system in place for the excavation to prevent collapse, or has it been sloped or battered back to a safe angle? (Note: an excavation more than 1.5 m deep that is deeper than it is wide at the top must be notified to WorkSafe.)
- Is a safe method used for putting in the support, without people working in an unsupported trench?
- Is there safe access into the excavation (eg a sufficiently long, secured ladder)?
- Are there barriers or other protection to stop people and vehicles falling in?
- Is the excavation fenced off from unauthorised access?
- Are properly secured stop blocks provided to prevent tipping vehicles falling in?
- Could the excavation affect the stability of neighbouring structures or services?
- Are materials, spoil and plant stored away from the edge of the excavation to reduce the chance of a collapse?
- Is the excavation regularly inspected by a competent person?
- Are the results of inspections recorded?

For more information see worksafe.govt.nz

2.4 Working with vehicles and machinery

Traffic, vehicles and plant

- Have prestart checks been done, and any issues dealt with?
- Are vehicles well maintained, and are log books and maintenance records present and up to date?
- Are vehicles only operated by people trained to do so (where applicable) and are manufacturer's instructions followed?
- Are vehicles and pedestrians kept apart?
- If not, do you:
  - provide barriers to separate them as much as you can?
  - display warning signs?
- Are people kept away from slewing vehicles, or, if not, can you use a zero tail swing machine?
- Are vehicles and plant properly maintained, for example:
  - do the steering, brakes, hydraulics, mirrors and any other vision aid work properly?
  - are tyres in good condition and at the correct pressure?
  - are reversing alarms active?

- Can reversing be avoided (eg by using a one-way system or a turning area? If not, are properly trained spotters used)?
- Have drivers received proper training and are they competent and fit to use the vehicles or plant they are operating?
- Are loads properly secured?
- Have you made sure that passengers are only carried on vehicles designed to carry them?
- Have you made sure that plant and vehicles are not used on dangerous slopes?
- If you need to work on or drive across sloping ground, have you checked that the plant and vehicles are safe to use?
- Do you check that securing pins are in place on excavator quick hitches?

Tools and machinery

- Are the right tools or machinery being used for the job?
- Are all dangerous parts guarded (eg gears, chain drives, projecting engine shafts)?
- Are guards secured and in good repair?
- Are tools and machinery maintained in good repair and are all safety devices operating correctly?
- Are all operators trained and competent?

For more information see worksafe.govt.nz

2.5 Critical health risks

Hazardous substances

- Have you identified all harmful substances and materials, such as asbestos, lead, solvents, paints, cement and silica dust (eg from cutting concrete, bricks, rocks etc)?
- Is protective clothing and respiratory equipment provided?
- Have you checked whether a worker with the relevant approval is needed to deal with asbestos on site? (Most work with asbestos requires permission from WorkSafe, although you can do some very limited work with materials that contain asbestos without one.)



- Have you identified and put into place precautions to prevent or control exposure to hazardous substances, by:
  - doing the work in a different way, to remove the risk entirely?
  - using a less hazardous material?
  - using tools fitted with dust extraction?
  - using tools fitted with water suppression?
  - installing warning signs to show where work involving hazardous substances is taking place?
- Have workers had information and training so they know what the risks are from the hazardous substances used and produced on site, and what they need to do to avoid those risks?
- Have you arranged health monitoring for employees exposed to certain hazardous substances (eg lead, silica, cement, sensitisers such as twopack adhesives or coatings)?

For more information see worksafe.govt.nz

Noise

- Have you identified and assessed workers' exposure to noise?
- Have workers had information and training so they know what the risks are from noise on site, and what they need to do to avoid those risks?
- Can the noise be reduced by using different working methods or selecting quieter plant (eg by fitting breakers and other plant or machinery with silencers)?
- Are people not involved in the work kept away from the source of the noise?
- Is suitable hearing protection provided and worn in noisy areas?
- Have hearing protection zones been marked?
- Have you arranged health surveillance for employees exposed to high levels of noise?

Personal protective equipment

- Is suitable equipment provided to protect the head, eyes, hands and feet where appropriate?
- Do workers wear their protective equipment, and do they wear it correctly?
- Have workers been trained in the safe use, care and storage of protective equipment?

For more information see worksafe.govt.nz



2.6 Worker wellbeing

Amenities and facilities

- Has a suitable toilet been provided?
- Is there a clean wash basin, hot/warm water, soap and towel?
- Is wet-weather gear provided for those who have to work in wet conditions?
- Is there a place where workers can take shelter and have meals? Do they have access to drinking water?
- Is there a suitable first-aid kit?

For more information see worksafe.govt.nz

Workloads and fatigue

- Do workers take regular, quality rest breaks in their working day?
- Are working hours reasonable and not too long? If longer working days are required, are start and finish times staggered, and/or are longer rest breaks and periods off work allowed?
- Are tasks scheduled suitably throughout a work period (eg critical jobs are avoided during the low body clock period of 3 pm to 5 pm)?
- Is work scheduled to allow enough time for completion?
- Are monitoring and limitations in place for overtime worked, consecutive night shifts, shift swapping and on-call duties?
- Are jobs rotated to minimise exposure to extreme temperature and excessive mental or physical demands?
- Is fit-for-purpose plant, machinery and equipment used?
- Are workloads practical and manageable, with consideration given to any work flow changes (eg machinery breakdowns or unplanned absences)?

Alcohol and drugs

- Is there a policy and procedure in place to constructively manage alcohol- and other drug-related hazards?
- Are workers monitored for signs of alcohol and drug use (eg dizziness, slurred speech, drowsiness, sudden aggressive or violent behaviour, lack of or impaired coordination/relflexes)?

For more information see worksafe.govt.nz



2.7 Emergency situations

Emergencies

- Are there emergency procedures (eg for evacuating the site in case of fire)?
- Do people on site know what the procedures are and where the nearest emergency centre is?
- Is there a means of raising the alarm, and does it work?
- Is there a way to contact the emergency services from site?
- Are there enough suitable escape routes and are these kept clear?
- Are first aid arrangements good enough for the site, and is there someone available who can administer first aid if needed?

Fire

- Is the quantity of flammable materials, liquids and gases kept to a minimum?
- Are they properly stored (eg are gas cylinders chained in position)?
- Are flammable gas cylinders returned to a ventilated store at the end of the shift?
- Are smoking and other ignition sources banned in areas where gases or flammable liquids are stored or used?
- Are gas cylinders, associated hoses and equipment properly maintained and in good condition?
- When gas cylinders are not in use, are the valves fully closed?
- Is flammable and combustible waste removed regularly and stored in suitable bins or skips?
- Are suitable fire extinguishers provided?

Notes

Disclaimer

This publication provides general guidance. It is not possible for WorkSafe to address every situation that could occur in every workplace. This means that you will need to think about this guidance and how to apply it to your particular circumstances.

WorkSafe regularly reviews and revises guidance to ensure that it is up-to-date. If you are reading a printed copy of this guidance, please check worksafe.govt.nz to confirm that your copy is the current version.

ISBN: 978-0-478-42543-7 (print)
ISBN: 978-0-478-42544-4 (online)

Published: July 2018

PO Box 165, Wellington 6140, New Zealand

worksafe.govt.nz



Except for the logos of WorkSafe, this copyright work is licensed under a Creative Commons Attribution-Non-commercial 3.0 NZ licence.

To view a copy of this licence, visit http://creativecommons.org/licenses/by-nc/3.0/nz

In essence, you are free to copy, communicate and adapt the work for non-commercial purposes, as long as you attribute the work to WorkSafe and abide by the other licence terms.

WSNZ_1211_JUL 2018

ISBN: 978-0-478-42543-7 (print)
ISBN: 978-0-478-42544-4 (online)

WORKSAFE
NEW ZEALAND | MAHI HAUMARU AOTEAROA

Level 6, 86 Customhouse Quay
PO Box 165, Wellington 6140

0800 030 040 worksafe.govt.nz

HDC Approved Consent Document (In accordance with BA 2004, Cl. 49(1)) - Processed by : Brenna Ogier - BC No. 200465

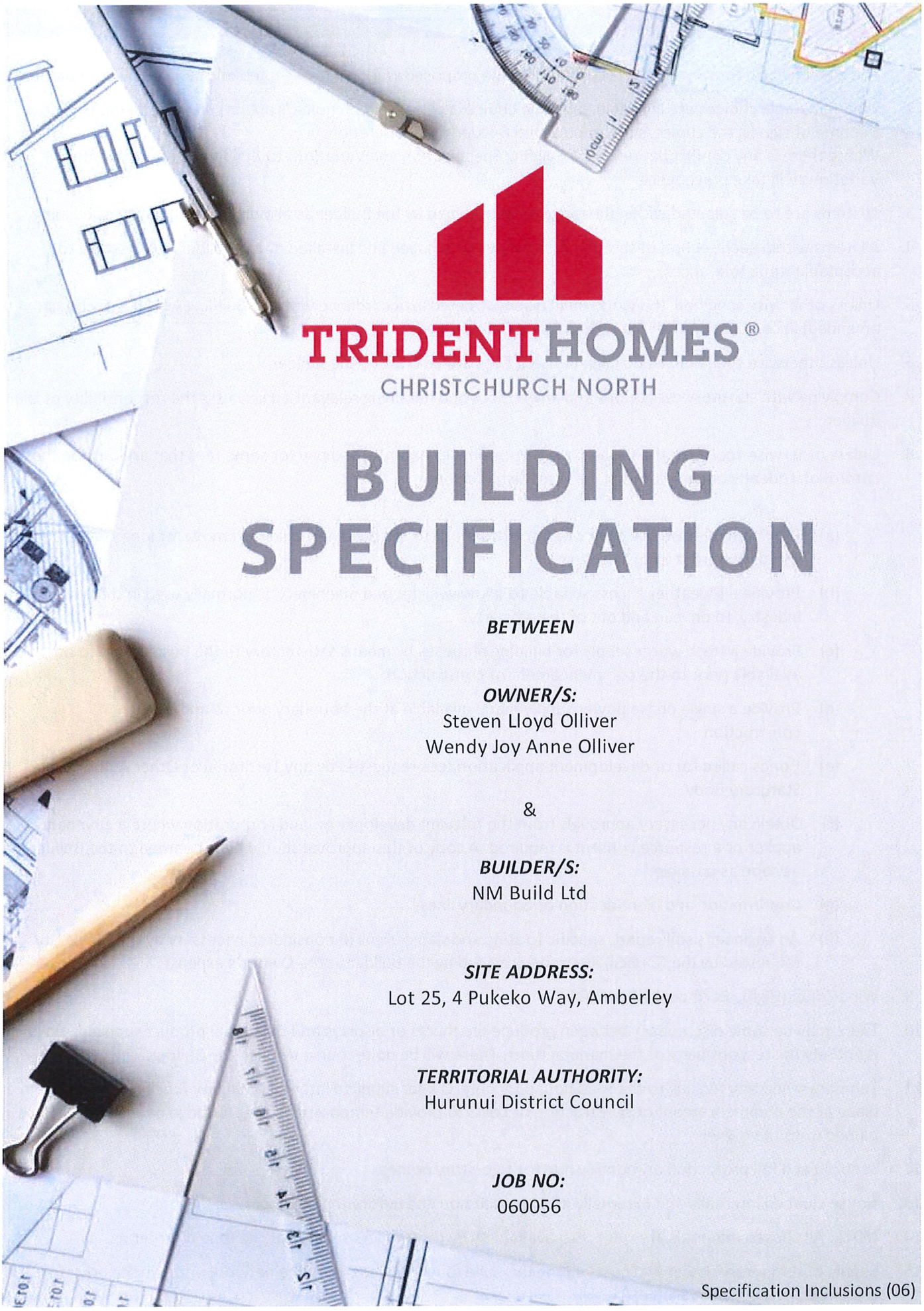

TRIDENT HOMES®
CHRISTCHURCH NORTH

BUILDING SPECIFICATION

BETWEEN

OWNER/S:
Steven Lloyd Olliver
Wendy Joy Anne Olliver

&

BUILDER/S:
NM Build Ltd

SITE ADDRESS:
Lot 25, 4 Pukeko Way, Amberley

TERRITORIAL AUTHORITY:
Hurunui District Council

JOB NO:
060056

Specification Inclusions (06)

HDC Approved Consent Document (In accordance with BA 2004, Cl. 49(1)) - Processed by : Brenna Ogier - BC No. 200465

General

1. This specification forms part of the contract for the proposed work when executed and initialed by both parties.
2. Where multiple choices are available, only one choice is permitted. If choice/s are not clarified by the Owner at the time of signing the choice/s are to be at the Builder's sole discretion.
   Where there is any conflict between the Building Specification and Variations to Building Specification the Variations will take precedence.
3. All items are to be selected within the range as determined by the Builder as allowable for this style of building.
4. All items within each section of this specification when supplied and installed by the builder, will be done to acceptable trade tolerances.
5. Unless otherwise specified, the works shall be constructed in accordance with the Building Act 2004 (Act) (as amended) in conjunction with the New Zealand Building Code.
6. Unless otherwise specified, all Building Consent Fees are paid for by the Builder.
7. Complying with statutory obligations and any notices and obtaining relevant approvals is the responsibility of the Builder.
8. Unless otherwise specified, the Owners are responsible to organise and pay for some fees that are outside the control of Trident Homes – some of these are listed below.

   (a) Provide the house site clear of any obstructions to the building including removal of long grass, shrubs and trees where necessary.

   (b) Provide all-weather access suitable to allow vehicles and machinery as normally used in the building industry, to drive in and out of the property.

   (c) Provide a fresh water supply for building purposes by means satisfactory to the Builder, and to be available prior to the commencement of construction.

   (d) Provide a single phase power supply made available at the boundary prior to and during construction

   (e) Bonds called for or development application fees requested by any Territorial or Other Authority or Statutory Body.

   (f) Obtain any necessary approvals from the relevant developer or land corporation where a covenant applies or a resource consent is required. A copy of this approval should be forwarded to the Builder as soon as possible.

   (g) Confirmation and identification of boundary lines.

   (h) An Engineer's soil report, specific footing and slab designs (if considered necessary by the Builder, or requested by the Council) are to be provided by the Builder at the **Owner's** expense.

9. Wind Zone: (High), Earthquake Zone: (3)
10. There may be some discrepancy between produce brochures or displays and the actual product supplied, which is entirely the responsibility of the manufacturer. There will be no recourse through the Builder.
11. Temporary security fencing to the road boundary only. Owner supplied internal boundary fencing needs to be in place at the commencement of construction or costs to provide temporary fencing to those boundaries shall be passed onto the owner.
12. Scaffold and fall protection or monthly hire for two-story homes.
13. House cleaned internally and externally after completion and before the handover.
14. **NOTE:** All chosen materials are subject to availability by the Builders supplier at the time of ordering.
15. Supply of temporary power and costs during the build (boundary box from the network or down the drive for rear sections must be available)

HDC Approved Consent Document (In accordance with BA 2004, Cl. 49(1)) - Processed by : Brenna Ogier - BC No. 200465

16. 12 Month Warranty Defects and Maintenance
17. Master Builders 10 year Guarantee.

GENERAL VARIATIONS

1. Any materials, goods or items that are supplied by the Owners for Trident Homes to install, will not form part of the Trident Homes warranty or be covered by the Trident Homes Contract Works Insurance Policy. The owners will need to arrange their own insurance to cover the materials, goods and items supplied by them.
2. If the Owners are providing any materials or labour to any part of this home, it is the owner's responsibility to keep the Builder's representative fully informed of the progress.
3. Owner's access to the site will be after Trident Homes have been paid in full after completing their part of the contract.
4. Owners to supply and install all Temporary Site Safety Fencing to comply with F5 Work Site Barrier regulations – Note: This needs to be completed prior to work commencing to meet compliance.

1. Excavation

The Owner acknowledges that after breaking the surface of the ground, if variations are required by the Engineer, or Territorial or Other Authorities, or due to the nature of site access or due to extra excavations or footings required if rock or other obstacles are encountered, then the Builder will notify the Owner of the cost of such variation together with a reasonable allowance for overheads and profits shall be adjusted against the contract sum. Please refer to clause 20 in the Residential Building Contract.

(a) Based on a standard NZS 3604, site scape up to 75mm to remove organic matter and min 300mm deep foundation

(b) Site scrape to house area only allowed.

(c) Excavated material, spoil etc to be stockpiled on site by Builder, maximum 6m from the dwelling.

1.0 EXCAVATION VARIATIONS

2. Foundations/Floor

(a) Builder to supply and place compacted hard fill up to 250mm.

(b) Footings and Slab are designed for soil with a minimum bearing of 100 kpa. Concrete foundations to be 20mpa with a fare-face finish, or concrete block (at Trident Homes discretion). The depth of foundations to be 300 mm.

(c) Floor slab to be a minimum 20mpa concrete, smooth finish, 500E SE62 reinforcing mesh to the entire floor. **Minimum permitted ground clearances must be adhered to in accordance with the NZ Building Code.** (Min FGL to floor Brick 150mm Other 225mm)
Note: There is no allowance for any backfill, site levelling or landscaping unless specified in section **27. EXTERIOR WORKS**

(d) Extra piers, beams, steel etc if required by the Engineer or Territorial Authority after Territorial Authority approval are at the Owner's expense.

Important Note: *Concrete floors are susceptible to shrinkage and movement. All care is taken to minimize this occurring by installing mesh to the entire floor, and applying control cuts to the top of the floor as required. However, shrinkage and movement, although not structural, is beyond our control, therefore we will not guarantee cracking won't occur.*

2.0 FOUNDATIONS/FLOOR VARIATIONS

HDC Approved Consent Document (In accordance with BA 2004, Cl. 49(1)) - Processed by : Brenna Ogier - BC No. 200465

3. Drainage

(a) Sewerage installation to be in accordance with Territorial Authority Approved Plan, the total run of sewerage up to 40 lineal metres.

- All sewerage pipes to be 100 mm uPVC SN4
- Septic tank and the effluent system is not applicable

(b) Stormwater is to be piped in accordance with the Territorial Approved Plan – maximum of 40 lineal metres. All stormwater pipe to be 110 mm uPVC SN with a "Type 1" sump included.

PRELIMINARY AND GENERAL
Read and note all clauses under **Preliminary and General** of this contract where they apply to this trade. All drainage work to comply with the requirements of the following Codes:

- **AS/NZS3500 plumbing and drainage code**
  OR
- **NZBC G13/AS1/AS2**
- NZBC E1/AS1 surface water
- AS/NZS1260 PVC pipes and fittings for drains, waste and vent applications
- Plumbers, Gasfitters and Drainlayers Act 2006

EXTENT OF WORK
Work in this section of the contract comprises all surface and foul water drainage up to above ground level to connect to Plumbers work. Include all pipes and specials, inspection points, fittings, construction of manholes, all gully traps and connections for terminal vents, soil and waste pipes. The drain layer shall confer with the plumber and shall arrange with the contractor before the foundations are laid to fix the exact position of all connections to wastes and drains.

INSPECTIONS
The drainage contractor shall allow and arrange for all tests by the Territorial Authority and ensure signed documents remain on site.

MATERIALS
All materials shall be the best of their respective kinds.

CONNECTION TO EXISTING DRAINAGE
The drain layer is responsible for verifying the position and depth of the connection and commence laying his drains to this point.

DRAIN TRENCHES
The excavation of trenches for drains shall be accurately made with base clean and true to grade so that no unnecessary filling is required. Adequate width shall be allowed in accordance with the depth of drain to enable laying and jointing to be properly carried out. Trenches shall be kept firm and dry and shall be opened up only in lengths that can be protected, utilized, and refilled within a reasonable time.

LAYING OF DRAINS
All drains are to be adequately supported in the bottom of the trench. The pipes are to be laid to straight lines and even grades in accordance with the code specified in Preliminary and General, for sizes and gradients. Drains shall be tested to be completely tight in accordance with the code specified in Preliminary and General.
Backfill drain lines in 150 mm layer, well tamped but without disturbing or damaging drains. Finish off with 150 mm of topsoil slightly mounded above the finished ground line to allow for natural settling.

FITTINGS

HDC Approved Consent Document (In accordance with BA 2004, Cl. 49(1)) - Processed by : Brenna Ogier - BC No. 200465

The site plan shows the layout of the system. Additional fittings that are normally required, such as inspection points and inspection bends, etc, which may be required but are not specifically shown, must be allowed for by the drain layer to comply with normal, practice under the regulations.

JOINTING OF PIPES
The pipes are to be joined in a proper manner and provided with adequate maintenance and inspection points in accordance with the code specified in Preliminary and General.

FALL OF DRAINS
The whole of the soil and storm water drainage system is to be laid at a regular and even fall.

GULLY TRAPS
Supply and install all gully traps where shown, 100 mm minimum above finished ground level. All gully traps are to be fitted with plastic gratings and also a grating or perforated plate above the wastes discharging into it.

SEWER AND STORMWATER MAIN CONNECTIONS – to be confirmed in PIM documents
If there are no supplied laterals to the site then the drain layer shall arrange for the Council to provide connections to main public lines where the Owner to pay all charges in relation to any additional Council fees required plus any additional physical work needed.

COMPLETION
Supply a 1:100 scale as-built drawing of drains and fittings to the T.A. and to the Builder on completion. On completion of all work ensure that all leftover materials (excluding earth fill and spoil) is removed and the site left in a tidy state. Properly backfill all trenches and consolidate as filling proceeds.

3.0 DRAINAGE VARIATIONS

1. Install and commission owner supplied chamber and macerator pump for a low pressure sewer system.

4. Construction

Timber Framing
Refer to SELECTIONS/drawings for the specific product, material, accessories and finish selections.

TIMBER FRAMING GENERALLY
Wall framing to be SG8 H1.2 with Radiata top and bottom plates, and New Zealand Oregon studs. Species, grade and level of treatment to New Zealand Standards 3602, tables 1 to 3, requirements for wood-based building components, and moisture content to NZS 3602, table 4, allowable moisture content. Grading to NZS 3631. Mechanical stress grading acceptable as an alternative to visual grading.

TIMBER FRAMING DRY, CHEMICAL FREE. MECHANICALLY STRESS GRADED
Species and grade to NZS 3602, tables 1 to 3. Requirements for wood-based building components with an average moisture content at the supply of 16% or less. Machine stress graded to AS/NZS 1748.

TIMBER FRAMING DRY, TREATED
Species, grade and level of treatment to NZS 3602, tables 1 to 3. Requirements for wood-based building components and moisture content to NZS 3602, table 4 allowable moisture content. Either mechanically stress graded to AS/NZS 1748, or visual grading to NZS 3631.

ACCESSORIES

Damp Proof Course:	High impact embossed polyethylene

Owner/s

Builder

HDC Approved Consent Document (In accordance with BA 2004, Cl. 49(1)) - Processed by : Brenna Ogier - BC No. 200465

Nails, bolts & screws:	Steel, stainless steel, galvanized steel of pattern to suit the location and to BRANZ Bulletin 453: Fastners selection. To NZS 3604, section 4 Durability, for durability.
Nail plates connectors:	Stainless steel and/or galvanised steel toothed or nailed plates to the plate manufacturer's design for the particular locations as shown on the drawings and to NZS 3604, section 4 Durability, for durability. Galvanised steel and stainless steel connectors and brackets to the connector manufacturer's design for locations shown on drawings and to NZS 3604, section 4 Durability, for durability.

ATTENDANCE
Provide and fix blocks, nogs, openings and other items as required by others.

MOISTURE CONTENT
Maximum allowable moisture content to NZS 3602, table 4 allowable moisture content for framing supporting interior linings:

- Framing at erection 24%
- Framing at enclosure 20%
- Framing at lining 16%

EXECUTION GENERALLY
To NZS 3604 except as varied in this specification. To include those methods, practices and processes contained in the unit standards for the National Certificate in Carpentry and the National Certificate in Joinery (cabinetry, exterior joinery, stairs). Set out framing in accordance with the requirements of NZS 3604 and as required to support sheet linings and claddings.

INSTALL FLOOR, WALL AND ROOF FRAMING
Floors and bottom plates framed and fastened to NZS 3604, section 7 floors. Frame walls to required loading and bracing complete with lintels, sills and nogs, all fabricated and fastened to NZS 3604, section 8 Walls. Frame roof to required loading and bracing complete with valley boards, ridge boards and purlins to NZS 3604, section 10 Roof framing. Design and fit roof trusses complete with anchorage. All fabricated and fastened to NZS 3604, section 9 Posts, and section 10 Roof framing.

(a) 2.4m Ceiling height.

(b) 8mm IBS RidgidWrap air barrier and structural bracing.

(c) 4.5mm Hardiflex soffit.

(d) Lining around the bath to be Hardibacker ready for Tiles.

4.0 CONSTRUCTION VARIATIONS

5. Fascia & Gutter

This section will comply with the Roofing Code of Practice (September 2003) from the Roofing Manufacturers Association of New Zealand.

(a) Fascia to be a metal Concept fascia system

(b) Gutter to be a metal Quad gutter system

5.0 FASCIA & GUTTER VARIATIONS

HDC Approved Consent Document (In accordance with BA 2004, Cl. 49(1)) - Processed by : Brenna Ogier - BC No. 200465

6. Roof

This area will comply with the Roofing Code of Practice 2012 V2.2 from the Roofing Manufacturers Association of New Zealand.

(a) Roof covering to be Longrun Corrugated Iron pre-coated from builder's selection.

(b) Self-supporting building paper is included. (ThermaKraft 215)

(c) All roof flashings as required are made from .55 gauge pre-coated steel.

6.0 ROOF VARIATIONS

7. Exterior Windows, Doors & Glazing

(a) Aluminium colour finish is standard powder coat colour

(b) Reveals are pre-primed with a 19mm finished thickness to a maximum board width of 114mm

(c) Flashings are included as required

(d) Front entry door: Aluminium Thermatek TG & V Entrance Door Panel

(e) Front entry door handle: Windsor Polo Pull Handle 7100, 1221 Combo

(f) Front door side lights are included (if drawn in the plan)

(g) Exterior laundry door to be a swing aluminium glass door (if drawn in the plan)

(h) Glass to be clear double glazed

(i) Hardware same colour finish as Aluminium with non-locking sliding door handles and key/snib hinged door handles

(j) Obscure glass to toilet and bathroom(s) glass pattern Stippolyte

(k) All glass complies with NZS 4223 Safety Standards

7.0 EXTERIOR WINDOWS, DOORS & GLAZING VARIATIONS

8. Brick Cladding

The bricklayer will comply with the following standard – SHZ HB 4236:2002 NZ handbook for Masonry Veneer Wall Cladding

(a) Bricks to be from Builder's selection, Canterbury Clay Bricks, Classic Range.

(b) Exterior bricks to be as manufactured

(c) Joints to be "struck off"

(d) Mortar to be Natural (no colour) Colours are available for an additional cost

(e) Sills to be bricks laid on edge

Note: Bricks are a product that is not all truly identical. There is always some form of imperfection. Therefore when looking at a wall, look at the wall as 1, not individual bricks.

8.0 BRICK CLADDING VARIATIONS

1. Upgrade to Linea Weatherboard.

Owner/s Builder

HDC Approved Consent Document (In accordance with BA 2004, Cl. 49(1)) - Processed by : Brenna Ogier - BC No. 200465

9. Other Exterior Cladding

- 150mm Linea Weatherboard (where applicable). Finished with scribers and corner soakers, no Linea installed under sills at floor level wider than 1.2m.

9.0 OTHER EXTERIOR CLADDING VARIATIONS

1. Supply and install 150mm Linea Weatherboard finished with scribers and corner soakers, as indicated on the plans (Linea to be installed under windows and doors at floor level which is 1.2M in width or smaller) Or: finished with sills, facings and boxed corners.

10. Garage Door/S

(a) Pressed panel sectional door(s) Dominator Futura style woodgrain finish
(Up to 2280mm X 4.900mm opening size)

(b) Electric opener with 2 remote controls.

10.0 GARAGE DOOR/S VARIATIONS

1. Change to 2 x single Dominator garage doors as per plan.

11. Electrical

Because there is no electrical layout plan, our electrician will invite the Owner(s) on site to establish the location of all the electrical items listed below.

Preliminary and General –
Read and note all clauses under preliminary and general of this specification where they apply to this trade.
Documents to be referred to are:

- NZBC G9/VM1
- NZS 3000 Electrical Regulations – Buildings, structures and premises
- AS/NZS 3000 2007 Electrical Installations – Selection of Cables
- NZS 6401 PVC insulated cables for electric power and lighting
- Electrical Regulations 2010
- NZ Electrical Codes of Practice (ECP)

The following will be provided by the Builder via the Electrician:

(a) Up to 30m of underground single phase mains cable installed

(b) 1 Internal Modular Switch Board/Meter box with 4 RCD units

(c) 3 kw water heater circuit or califont circuit.

(d) Cooking appliance circuit

(e) 22 single light switches (PDL Iconic range)

(f) 2 two way light switches (PDL Iconic range)

(g) 32 LED downlights (SL-50 LED)

(h) 2 exterior bulkhead lights

HDC Approved Consent Document (In accordance with BA 2004, Cl. 49(1)) - Processed by : Brenna Ogier - BC No. 200465

(i) 1 sensor light

(j) PDL Iconic range of plugs

(k) 18 double plugs

(l) Garage door wiring including manual control wire

(m) Dishwasher outlet

(n) Rangehood outlet

(o) Microwave outlet

(p) Fridge outlet

(q) 2 towel rail outlets

(r) Fibre optic patch panel and media hinged enclosure and UHF Aerial

(s) 2 telecommunication outlets

(t) 2 TV outlets (aerial not included)

(u) 2 bathroom heater outlets (heaters not included)

(v) 2 Exhaust fan/s (ducted to exterior) as required

(w) 1 doorbell

(x) smoke alarms (as required to satisfy the Territorial Authority)

Important Note: *All stopping (plastering) to interior walls and ceilings is to a Level 4 finish. This is the highest Level without going to a full Level 5 skim coat. Any light fixtures or windows that wash the light over walls and ceilings* ***will*** *show the joins and other imperfections.*
If the owner is supplying their own light fixtures, they must notify the Builder prior to the Linings Stage (if not already noted in this specification). The builder will then evaluate the necessity to upgrade the Level 4 finish to a Level 5 to improve (not eliminate) the effects by way of a Variation after Contract.

11.0 ELECTRICAL VARIATIONS

1. Allowance of $2000.00 including GST included in the quotation for further electrical work and fittings over and above Trident Homes Standard Electrical Specification.

12. Plumbing

PRELIMINARY AND GENERAL –
Read and note all clauses in the Preliminary and General of this specification that shall apply to all work in this section. All plumbing work to comply with the requirements of the NZBC, refer to sections E1, G1-G4 and G10-G15.

- AS/NZS3500 Plumbing and Drainage Code
- AS/NZS1260 PVC pipes and fittings for drain, waste and vent applications
- NZS7641 Unplasticised PVC waste and ventilating pipe, fittings and accessories 32-50mm
- Plumbers, Gasfitters and Drainlayers Act 2006

All above-ground sanitary plumbing pipework shall be water tested to AS/NZS 2032 or air tested to Clause 15.3 of AS/NZS 3500.2 or paragraph 8.3 of E1/VM1. All below-ground drainage systems shall be tested to AS/NZS 2032 Section 11 for PVC-U drainage or air tested to 15.3 of AS/NZS 3500.

EXTENT OF WORK
Provide all materials and execution of all works necessary for the proper completion of the plumbing work. All work is

HDC Approved Consent Document (In accordance with BA 2004, Cl. 49(1)) - Processed by : Brenna Ogier - BC No. 200465

to be carried out by tradesmen registered as required by the plumbing and drainage regulations and relevant standards, and in accordance with the NZBC and Territorial Authority requirements. All pipework is to be concealed where possible within the wall spaces, or as indicated on the drawings. The carpenter is responsible for provision of all framing, blocking etc for the support of fittings. Co-operate with all other trades for the provision of ducts, trenches, cutouts in foundation and slab, and the laying of pipework. Holes for pipes through framing members shall be of minimum size and shall be positioned to ensure structural integrity of framing members are not compromised. Note requirements for any penetrations in floor joists from NZS3604 Section 8.

Plumber to inspect site before tendering and make necessary allowances for connecting to water supply. The Plumber shall be responsible for any damage by this trade to other services, structures, etc and shall make good as required at his expense.

Allow to fit all fittings as per plumbing schedule and drainage layouts. Confirm all fittings with owner.

Give all notices, pay all fees and arrange for the inspection of the work and materials.

MATERIALS
Provide all the materials, labour and plant necessary to complete work in accordance with the drawings and specifications, NZBC approved documents as specified in B1/1, B2, G1, G2, G13/1, G13/2.

All internal pipes shall be polybutylene to DIN 8077 and DIN 8078 complete with fittings and accessories brand matched. Silicone seal around pipes passing through framing members to eliminate knocking. Pressure test all fittings and pipework and ensure there are no leaks and all fittings are in good working order.

FLASHINGS
Generally provide all flashings required by all other trades to make the building weather tight. Flash and counter flash all pipes, vents and exhausts with lead or Butynol (or aluminium or Butynol for zincalume roofing) neatly capped to roofing. Or flash with approved paint on membrane system, and paint to match roofing colour.

DOWNPIPES
Connect 60 mm (min) diameter pre-painted metal pipes (fixed at not more than 1200 mm centres down the length of the downpipe) to spouting dropper outlets. Downpipes to discharge into the stormwater drainage system.

WATER SUPPLY
Water is on town supply.
Refer to:

- NZBC G12/AS1 water supplies
- AS2642 Polybutylene pipe fittings
- Plumbers, Gasfitters and Drainlayers Act 2006
- NZS4602

(a) Cold water can be obtained from the existing site connection via a mains pressure system providing adequate water pressure and volume, so avoiding the need for a cold water supply tank in or on the roof. Provide a medium pressure or high pressure mains system (to be discussed with the owner)

(b) Water heating is to be by means of a 250 litre medium or high pressure, with cold water feed through a pressure reducing valve and separate non-return value and complete with tempering valve set to maximum delivery temperature of 55 deg C.

COLD WATER SUPPLY – NZBC G12/AS1
Tap off the mains service lateral with 25mm ID polyethylene pipe and rubber ring compression fittings unless otherwise specified. Excavate trench, lay pipe, and back fill to appropriate NZBC and NZS standards. Connect to building reticulation system. Provide a gate valve at the building.

Pipe laid in a trench a minimum of 500 mm below finished ground level marker tape laid above in backfill. Provide pipe to 2 hose taps, in positions to be confirmed with owners, and to all fittings including hot water cylinder and washing

Owner/s Builder

HDC Approved Consent Document (In accordance with BA 2004, Cl. 49(1)) - Processed by : Brenna Ogier - BC No. 200465

machine. All branches to be short, straight and at as even gradient as possible with easybends used throughout. Use only approved connections throughout. All pipes are to be adequately supported, well secured and where possible concealed. Plumber to discuss with electrician, and provide means of electrical earthing, when using any form of metal piping.

HOT WATER SUPPLY – NZBC G12/AS1
Provide polypropylene fusion welded joint system hot water supply pipes and branches to all fittings including drain from HWC to exterior of building discharging over a gully trap. Installation shall be complete with seismic restraints and anti-scald device as per NZBC G12/AS1.
All hot water pipes to be insulated along their length with 22 mm wall thickness Insultube.

PIPE SUPPORTS
Pipes and their supports shall be electrochemically compatible.
Except where anchor points are necessary, the pipes shall be supported in a way that permits free movement of the pipe along its length. Acceptable methods include lagging the pipe at the support with Insultube.

Support Spacing
Above ground water supply shall be securely supported at centres of no greater than those in Table 7of NZBC G12.5.0

Movement in concrete or masonry
Pipes penetrating or installed in concrete or masonry walls or floors shall be either lagged with a flexible material, or passed through a sleeve, to permit fee movement for expansion and contraction.

Anchor points
Anchor points shall be provided where:

(a) Seal ring joints are used, and

(b) The joint is not able to resist the thrust imposed by the water pressure

Protection from frosts
Water supply pipework shall be insulated where water is likely to become frozen, to appropriate levels for this frost prone area.

Comment
Locations where the water supply pipework is likely to become frozen includes pipes concealed in exterior walls, ceiling spaces or basements fixed to the outside of buildings.

SANITARY FITTINGS
Allow to fix fittings as indicated on the plans for the following. Builder via the plumber to provide fittings. Carefully note dimensions and install where shown on plan and to owners approval.

TAPS, FAUCETS AND VALVES –
Fix all taps, faucets and mixing valves, as supplied by the Builder via the plumber. Fix all other water supply fittings as necessary

VENTS, SOIL STACKS – To comply with NZBC G13/AS1
The above shall be PVC extended up through the roof and flashed with approved flashing material. Terminal vent is to be of an approved size, located up the exterior of the wall, through the soffit to the roof. Note: - Building Code reference G13/AS1 provides a more comprehensive list of references that must be complied with.

COMPLETION
On completion of work ensure that all debris is removed and site is left in a tidy state.

12.0 PLUMBING VARIATIONS

1. Hot water cylinder removed (gas hot water)

Owner/s

Builder

HDC Approved Consent Document (In accordance with BA 2004, Cl. 49(1)) - Processed by : Brenna Ogier - BC No. 200465

13. Plumbing Items

(a)	Vanity/s	-	St Michel - Riva Classic 900mm, Acrylic basin
(b)	Toilet/s	-	Caroma - Alto II wall-faced toilet suite with soft close seat
(c)	Tapware:		
	1.Basin Mixer/s	-	Methven - Futura
	2.Bath Mixer/s	-	Methven - Futura FUT2010 (Shower Mixer is used)
	3.Shower Mixer/s	-	Methven - Futura FUT2010 Shower Mixer
	4.Shower Slide Rail/s		Methven - Kiri Satinjet Slide Rail
	5.Kitchen Sink Mixer/s	-	Methven - Echo Minimalist Goose Neck
	6.Bath Spout/s	-	Methven - Waipori Wall-mounted Bath Spout (203)
(d)	Laundry Tub & Mixer/s	-	Aquatica - Laundra Tubbie 560 x 560 Tub Unit & single lever Mixer
(e)	Shower/s	-	Clearlite - Cezanne 1m x 1m or (.9m X .9m to suit the design) Round Shower enclosure moulded wall
(f)	Bath/s	-	Le.Vivi - Veneto 1675mm
(g)	Toilet roll holder/s	-	Heirloom - Kubix
(h)	Heated Towel Rail/s	-	Newtech Square Ladder 7 Bar SS 800 X 600 ST75
(i)	Hot water cylinder	-	Peter Cocks - Direct Solar Ready (mains pressure) 250L
(j)	Mirror/s	-	900 x 900 polished edge
(k)	Outside tap/s	-	3 x external garden taps

13.0 PLUMBING ITEMS VARIATIONS

1. Client to supply vanities to Bathroom and Ensuite, Trident Homes to install.
2. Hot Water Cylinder removed for Rinnai VT26L Gas Califont.
3. Client to supply all taps including Basin mixers, Kitchen mixer, Shower and Bath mixers, Shower Slide rails with non-return valves and Bath spout, Trident Homes to install.

14. Gas Works

All gas installations including pipework appliance connections and gas cylinder stations shall comply with NZ Standards 5601. A certificate of compliance shall be provided by the gas installer on completion of the works.

14.0 GAS WORKS VARIATIONS

1. Supply and install an Infinity VT26l hot water gas califont and piping (no controller)
2. Install 45KG gas station and pipe work to Califont and gas hob.

Owner/s Builder

HDC Approved Consent Document (In accordance with BA 2004, Cl. 49(1)) - Processed by : Brenna Ogier - BC No. 200465

15. Insulation

(a) Wall insulation – Pink Batts Classic (R2.8)

(b) Ceiling insulation – Pink Batts Classic (R4.0)

Note: There is no insulation allowed for within the garage external walls and ceiling areas.

15.0 INSULATION VARIATIONS

1. Upgrade to R2.8 Pink Batts to exterior walls including Garage exterior walls.
2. Upgrade to R4.0 Pink Batts to Ceiling including Garage Ceiling.

16. Internal Linings

(a) All walls are sheeted with standard 10mm gypsum board, with the exception of bathroom walls (and ensuite if applicable) that are sheeted with Aqualine gypsum board. All walls finished to Level 4.

(b) All ceilings are sheeted with standard 10mm gypsum board, with the exception of bathroom ceilings (and ensuite if applicable) that are sheeted with Aqualine gypsum board finished to Level 4.

(c) Wall/Ceiling Junction - square stop finish.

(d) External corners - square stop finish.

Important Note: *All stopping (plastering) to interior walls and ceilings is to a Level 4 finish. This is the highest Level without going to a full Level 5 skim coat. Any light fixtures or windows that wash the light over walls and ceilings* ***will*** *show the joins and other imperfections.*
If the owner is supplying their own light fixtures, they must notify the Builder prior to the Linings Stage (if not already noted in this specification). The builder will then evaluate the necessity to upgrade the Level 4 finish to a Level 5 to improve (not eliminate) the effects by way of a Variation after Contract.

16.0 INTERNAL LININGS VARIATIONS

17. Interior Doors

(a) Internal doors to be a flush panel, hollow core, paint finish

(b) Wardrobe doors to be either aluminium sliders or flush panel hinged – refer to plan for confirmation.

17.0 INTERIOR DOORS VARIATIONS

18. Door Handles

(a) Windsor "Apex" style.

(b) Passage sets to all standard doors.

(c) Integrated privacy sets to the main bathroom, Ensuite and separate toilet doors.

<

18.0 DOOR HANDLES VARIATIONS

HDC Approved Consent Document (In accordance with BA 2004, Cl. 49(1)) - Processed by : Brenna Ogier - BC No. 200465

19. Internal Finishings

(a) Architraves to be a nominal size of 60 x 12 mm MUF (bevelled profile)

(b) Skirting to be a nominal size of 60 x 12 mm MUF (bevelled profile), Pre Painted Bathroom(s) and Ensuite(s) skirting (bevelled profile)

(c) Door Jambs to be a nominal size of 92 x 19 mm

19.0 INTERNAL FINISHINGS VARIATIONS

20. Joinery

Provisional Sum (PS) for all Kitchen/s joinery, supplied and installed is **$10,000.00** (including G.S.T.) Note no allowance for cut-outs in glass if glass splashback is chosen.

1. Wardrobe shelving to have one top shelf and rail and three 500mm wide shelves and panel to one side
2. Walk-in Robe shelving to have one top shelf and rail and two shelving units with three 500mm wide shelves each and panel to one side.
3. Four Shelves to Linen/Coat/Cylinder/Cupboard/s (if applicable)
4. All Shelving to be 18mm MDF with front edge inverted 60mm skirting.

20.0 JOINERY VARIATIONS

1. The $10,000.00 Joinery Provisional Sum is replaced with attached quotation reference 3448, V2 dated 24/11/2020

***Note**: If a granite bench top is chosen, the following must be noted: Additional time on the building contract This product is a natural item and may be subject to flaws that are beyond the control of Trident Homes*

21. Tiling

(a) Tiles from the Standard Trident Homes range no allowance for any feature tile, subway or mosaic tile installation.

1. Bath surround and plinth with 300 X 600 tiles and silver trim. Laid vertically, approximately 300mm high to splashback walls, 400mm high to the base and 70mm wide top surround. (if applicable)
2. Vanity splashback/s to one row of 200 (high) X 300 (wide) with Silver trim.

***Important Note:** Concrete floors are susceptible to shrinkage and movement. All care is taken to minimise this occurring by installing mesh to entire house and garage floor, and applying control cuts to the top of the floor. However shrinkage and movement are beyond our control, therefore we cannot guarantee movement won't occur and thus may crack floor tiles, cracked tiles are not covered under the warranty.*

21.0 TILING VARIATIONS

HDC Approved Consent Document (In accordance with BA 2004, Cl. 49(1)) - Processed by : Brenna Ogier - BC No. 200465

22. Painting

Finishing Schedule

Note: Trident Homes recommend the use of lighter colours.

Your price has been calculated on the basis of 3 colours from a white base. Walls, skirtings and shelving the same colour. Jambs and architraves the same colour *(unless otherwise specified in Painter Variations)*

Changing this will incur additional charges.

INTERIOR

Area: 1	Walls
Substrate:	Paper Faced Plasterboard
Condition:	**New**
Surface Preparation: Ensure that the plasterboard is installed in accordance with the manufacturer's instructions and is finished to the level specified. Lightly sand stopping if required and wipe down with a damp cloth. Ensure the surface is clean, dry, free from contamination and suitable for painting prior to the application of each coat.	
Coating Specification	
First Coat:	Taubmans Tradex Easysand – TA070 or Freesand – TA088
Second Coat:	Taubmans LivingProof Silk, Satin, Eggshell, Matt – TA036
Third Coat:	Taubmans LivingProof Silk, Satin, Eggshell, Matt – TA036

Area: 2	Ceilings
Substrate:	Paper Faced Plasterboard
Condition:	**New**
Surface Preparation: Ensure that the plasterboard is installed in accordance with the manufacturer's instructions and is finished to the level specified. Lightly sand stopping if required and wipe down with a damp cloth. Ensure the surface is clean, dry, free from contamination and suitable for painting prior to the application of each coat.	
Coating Specification	
First Coat:	Taubmans Tradex Easysand – TA070 or Freesand – TA088
Second Coat:	Taubmans Tradex Dead Flat Ceiling – TA081
Third Coat:	Taubmans Tradex Dead Flat Ceiling – TA081
Fourth Coat:	

Area: 3	Walls & Ceilings Wet Vented Service Areas
Substrate:	Paper Faced Plasterboard
Condition:	**New**

Owner/s

Builder

HDC Approved Consent Document (In accordance with BA 2004, Cl. 49(1)) - Processed by : Brenna Ogier - BC No. 200465

Surface Preparation: Ensure that the plasterboard is installed in accordance with the manufacturer's instructions and is finished to the level specified. Lightly sand stopping if required and wipe down with a damp cloth. Ensure the surface is clean, dry, free from contamination and suitable for painting prior to the application of each coat.	
Coating Specification	
First Coat:	Taubmans Tradex Pigmented Sealer – TA073
Second Coat:	Taubmans UltraProof Acrylic Enamel Gloss, Semi gloss, Satin, Eggshell – TA064
Third Coat:	Taubmans UltraProof Acrylic Enamel Gloss, Semi gloss, Satin, Eggshell – TA064

Area: 4	Doors, Architraves
Substrate:	MDF & Timber
Condition:	**New**
Surface Preparation: Minimum surface preparation: Ensure the surface is clean and dry. Fill any nail holes, cracks or surface imperfections with suitable filler or Wattyl Colourwood Woodstop Putty in a matching colour and stain, if desired. Sand thoroughly all surface in the direction of the timber grain; wipe down to remove sanding dust.	
Coating Specification	
First Coat:	Taubmans Tradex Easysand – TA070 or Freesand – TA088
Second Coat:	Taubmans UltraProof Acrylic Enamel Gloss, Semi gloss, Satin, Eggshell – TA064
Third Coat:	Taubmans UltraProof Acrylic Enamel Gloss, Semi gloss, Satin, Eggshell – TA064

Area: 5	Walls & Ceilings Wet Vented Service Areas
Substrate:	Fibre Cement Sheet
Condition:	**New**
Surface Preparation: Ensure Fibre Cement Board is fixed in accordance with manufacturers specifications. Ensure moisture content of the framing and sheets is below 15% prior to commencing jointing. Ensure the surface is clean, dry, free from contamination and suitable for painting prior to the application of each coat.	
First Coat:	Taubmans Tradex Pigmented Sealer – TA073
Second Coat:	Taubmans UltraProof Acrylic Enamel Gloss, Semi gloss, Satin, Eggshell – TA064
Third Coat:	Taubmans UltraProof Acrylic Enamel Gloss, Semi gloss, Satin, Eggshell – TA064

EXTERIOR

Area: 1	Cladding, soffits, fascia
Substrate:	Fibre Cement Sheet & Weatherboard
Condition:	**New**
Surface Preparation: Ensure Fibre Cement Board & Weatherboard is fixed in accordance with manufacturers specifications. Ensure moisture content of the framing and sheets is below 15% prior to commencing jointing. Ensure the surface is clean, dry, free from contamination and suitable for painting prior to the application of each coat.	

HDC Approved Consent Document (In accordance with BA 2004, Cl. 49(1)) - Processed by : Brenna Ogier - BC No. 200465

First Coat:	Wattyl Solagard, Gloss, Semi gloss, Low Sheen – WA136 - thinned 10% with fresh clean water
Second Coat:	Wattyl Solagard, Gloss, Semi gloss, Low Sheen – WA136
Third Coat:	Wattyl Solagard, Gloss, Semi gloss, Low Sheen – WA136

22.0 PAINTING VARIATIONS

1. Upgrade to paint exterior Linea 150mm weatherboard.

23. Appliances

(a)	Wall Oven	- Fisher & Paykel OB60SC5CEX2
(b)	Hob	- Fisher & Paykel CE604CBX2
(c)	Rangehood 900 Canopy	- Fisher & Paykel HC90PLX4
(d)	Dishwasher	- Fisher & Paykel DW60FC2X1

23.0 APPLIANCES VARIATIONS

1. Change Hob to a Fisher & Paykel Performance Stainless 4 Burner Gas Cooktop (CG604DX1)

2. Client to supply Rangehood and Trident Homes to install.

24. Heating

- Available on request.

24.0 HEATING VARIATIONS

1. Client to supply a new heat pump to Master Bedroom. Trident Homes to install, warranty on installation only.

2. Supply and install a Haier Flexis 7.6Kw (heating) Hi-wall heat pump Including WiFi (AS71FEBHRA/1U71SABFRA) to living room.

25. Floor Coverings

(a)	Underlay	- 10mm Foam
(b)	Carpet	- Belgotex – from the Delta or Empire collection
(c)	Vinyl	- Belgotex – from the Alpha, Luna, Select or Select Titanium collection

25.0 FLOOR COVERINGS VARIATIONS

26. Window Coverings

26.0 WINDOW COVERINGS VARIATIONS

HDC Approved Consent Document (In accordance with BA 2004, Cl. 49(1)) - Processed by : Brenna Ogier - BC No. 200465

27. Exterior Works

- Road vehicle crossing to be formed with base course only for site access - finish surfacing and kerbing not included.
- No allowance has been made for Exterior Landscaping, Concrete Paths, Driveways or Fences.

27.0 EXTERIOR WORKS VARIATIONS

1. Supply and lay 80m² of plain non slip reinforced concrete to areas shown on plan NB: maximum base up of 150mm above ground level, no concrete pumping or Hydro vacuum services allowed for if required and no allowance to remove any excavated material from site.

Owner/s

Builder

HDC Approved Consent Document (In accordance with BA 2004, Cl. 49(1)) - Processed by : Brenna Ogier - BC No. 200465

Job N° 060056

VARIATIONS TO BUILDING SPECIFICATION

GENERAL

1. Any materials, goods or items that are supplied by the Owners for Trident Homes to install, will not form part of the Trident Homes warranty or be covered by the Trident Homes Contract Works Insurance Policy. The owners will need to arrange their own insurance to cover the materials, goods and items supplied by them.
2. If the Owners are providing any materials or labour to any part of this home, it is the owner's responsibility to keep the Builder's representative fully informed of the progress.
3. Owner's access to the site will be after Trident Homes have been paid in full after completing their part of the contract.
4. Owners to supply and install all Temporary Site Safety Fencing to comply with F5 Work Site Barrier regulations – Note: This needs to be completed prior to work commencing to meet compliance.

1. EXCAVATION

2. FOUNDATIONS/FLOOR

3. DRAINAGE

1. Install and commission owner supplied chamber and macerator pump for a low pressure sewer system.

4. CONSTRUCTION

5. FASCIA & GUTTER

6. ROOF

7. EXTERIOR WINDOWS, DOORS & GLAZING

8. BRICK CLADDING

1. Upgrade to Linea Weatherboard.

9. OTHER EXTERIOR CLADDING

1. Supply and install 150mm Linea Weatherboard finished with scribers and corner soakers, as indicated on the plans (Linea to be installed under windows and doors at floor level which is 1.2M in width or smaller) Or: finished with sills, facings and boxed corners.

10. GARAGE DOOR/S

1. Change to 2 x single Dominator garage doors as per plan.

Owner/s

Builder

HDC Approved Consent Document (In accordance with BA 2004, Cl. 49(1)) - Processed by : Brenna Ogier - BC No. 200465

11. ELECTRICAL

1. Allowance of $2000.00 including GST included in the quotation for further electrical work and fittings over and above Trident Homes Standard Electrical Specification.

12. PLUMBING

1. Hot water cylinder removed (gas hot water)

13. PLUMBING ITEMS

1. Client to supply vanities to Bathroom and Ensuite, Trident Homes to install.
2. Hot Water Cylinder removed for Rinnai VT26L Gas Califont.
3. Client to supply all taps including Basin mixers, Kitchen mixer, Shower and Bath mixers, Shower Slide rails with non-return valves and Bath spout, Trident Homes to install.

14. GAS WORKS

1. Supply and install an Infinity VT26l hot water gas califont and piping (no controller)
2. Install 45KG gas station and pipe work to Califont and gas hob.

15. INSULATION

1. Upgrade to R2.8 Pink Batts to exterior walls including Garage exterior walls.
2. Upgrade to R4.0 Pink Batts to Ceiling including Garage Ceiling.

16. INTERNAL LININGS

17. INTERIOR DOORS

18. DOOR HANDLES

19. INTERNAL FINISHINGS

20. JOINERY

1. The $10,000.00 Joinery Provisional Sum is replaced with attached quotation reference 3448, V2 dated 24/11/2020

   ***Note**: If a granite bench top is chosen, the following must be noted: Additional time on the building contract This product is a natural item and may be subject to flaws that are beyond the control of Trident Homes*

21. TILING

HDC Approved Consent Document (In accordance with BA 2004, Cl. 49(1)) - Processed by : Brenna Ogier - BC No. 200465

22. PAINTING

1. Upgrade to paint exterior Linea 150mm weatherboard.

23. APPLIANCES

1. Change Hob to a Fisher & Paykel Performance Stainless 4 Burner Gas Cooktop (CG604DX1)

2. Client to supply Rangehood and Trident Homes to install.

24. HEATING

1. Client to supply a new heat pump to Master Bedroom. Trident Homes to install, warranty on installation only.

2. Supply and install a Haier Flexis 7.6Kw (heating) Hi-wall heat pump Including WiFi (AS71FEBHRA/1U71SABFRA) to living room.

25. FLOOR COVERINGS

26. WINDOW COVERINGS

27. EXTERIOR WORKS

1. Supply and lay 80m² of plain non slip reinforced concrete to areas shown on plan NB: maximum base up of 150mm above ground level, no concrete pumping or Hydro vacuum services allowed for if required and no allowance to remove any excavated material from site.

25 November 2020

Hurunui District Council
66 Carters Road
Amberley 7410

Dear Sir/Madam,

Re: Construction of Dwelling at: Lot 25, 4 Pukeko Way, Amberley
Job No. 060056

Please direct all correspondence relating to the construction of the abovementioned dwelling, to our builder N M Build Ltd Franchisee for Trident Homes Christchurch North, 756 Main North Road, PO Box 76 178, Christchurch 8051.

Yours faithfully

.....

Steven Lloyd Olliver and Wendy Joy Anne Olliver

/ / 2020

HURUNUI DISTRICT COUNCIL
P.O. Box 13 | Amberley | 7441 | 66 Carters Road | Amberley | 7410
Phone 03 314-8816 | Fax 03 314-9181 | Email info@hurunui.govt.nz
Web hurunui.govt.nz | facebook.com/HurunuiDistrictCouncil
Skype hdc_customer_services | twitter.com/hurunuidc

FORM 2
APPLICATION FOR PROJECT INFORMATION MEMORANDUM AND / OR BUILDING CONSENT

Section 33 or Section 45, Building Act 2004

APPLICATION

I request that you issue a:

- ✔ Building Consent (including Project Information Memorandum)
- Project Information Memorandum only (PIM)
- Building Consent only — The existing PIM No. (if applicable) is: ……..
- Amendment to an existing Building Consent — The existing BC No is: ……

for the building work described in this application:

THE BUILDING

Street Address: (or rapid number if applicable) :
(for structures that do not have a street address, state the nearest street intersection and the distance and direction form that intersection)

Lot 25, 4 Pukeko Way
Amberley

Legal description of land where building is located :
(state legal description as at the date of application and, if the land is proposed to be subdivided, include details of relevant lot numbers and subdivision consent)

Lot 25, DP488914

Building Name if applicable :

Location of building within site/block number:
(include nearest street access)

Number of levels: 1
(include ground level and any levels below ground)

Level/Unit No:

Floor Area (all floors included):

Total / Existing : _____ m^2

New / Additional : 204.24 m^2

Affected / Altered : _____ m^2

(indicate area affected by the building work if less than the total area)

Year first constructed:
For dwelling alterations/additions put year first constructed. If unknown put approx. decade.

Current lawfully established use:
(include number of occupants per level and per use if more than 1. If use was changed by the building work this application relates to, state previous use)

THE PROJECT

Description of building work:
(Provide sufficient information for scope of work to be fully understood, e.g. "3 bedroom dwelling with attached garage and wood burner" or " 3 bay domestic farm shed" or "Commercial shop fit-out")

New Residential Dwelling

Intended use : Home

Will the building work result in a change of use of the building? Yes ✔ No
(Refer to Building (Specified Systems, Change of Use, and Earthquake-prone Buildings) Regulations 2005 if in doubt)

If "Yes", provide details of the new intended use:

Water requirements:

- ✔ New connection to Hurunui District Council Supply (if available)
- Existing connection to Hurunui District Council Supply
- Own private supply (well or community scheme)

Intended life of the building:

- ✔ Indefinite but not less than 50 years
- or specified as _____ years

List building consents previously issued for this project (if any): *(ie, is this project being constructed in stages? Is this consent for a relocated or transportable building?)*

Estimated Value of the building work (inc GST):
$ 388,457.65
on which building levy will be calculated (including GST). State estimated value as defined in section 7 of the Building Act 2004.

If this is an application to amend a building consent, advise the estimated value of amended work (inc GST):
$_____

Is this in addition to, or reduction from, what was stated with the original application?

Addition Reduction No change

THE OWNER	AGENT – APPLICANT: ☐ N/A
Owner's Name: Steven Olliver & Wendy Olliver	Agent's Name: NM Build Ltd t/a Trident Homes ChCh North
Contact Person: (if owner is not an individual) Wendy	Contact Person: Peter Nisbet
Mailing Address: 19 South Crescent, Amberley	Mailing/Billing Address: PO Box 76178, Northwood,
	Christchurch
Postcode:	Postcode: 8548
Street Address/Registered Office:	Street Address/Registered Office: 756 Main North Road,
	Belfast, Christchurch
Postcode:	Postcode: 8051
Mobile Phone: 0279454377	Mobile Phone: 0274 888 2001
Phone:	Phone: 03 375 9020
After Hours Phone:	After Hours Phone:
Landline:	Landline:
Daytime:	Daytime:
Fax Number:	Fax Number:
E-mail Address: wendyolliver62@yahoo.com.au	E-mail Address: pnisbet@tridenthomes.nz
Website:	Website: www.tridenthomes.nz
The following evidence of ownership is attached to this application: ✔ Certificate of Title Sale and Purchase Agreement (only if new purchase)	Relationship to owner: (State details of authorisation from the owner to make the application on the owner's behalf)
	All consent related invoices/refunds to be addressed to: Owner ✔ Agent Note - The Agent will be the first point of contact for communications with the Council/Building Consent Authority regarding this application / Building Work and will receive all correspondence

RESTRICTED BUILDING WORK

Will the building work include any restricted building work ✔ Yes No

If yes, provide the following details of all licensed building practitioners who will be involved in the carrying out or supervising the restricted building work - *[if these details are unknown at the time of the application, they must be supplied before the work begins]*

Licensing Class	Name and address	Licensed practitioner number (or registration number treated as being licensed under section 291 of the building Act 2004)
Foundations	Concrete Contractors Ltd	136689
Carpentry	Camel Contruction	LBP104038
Exterior Plasterer		
Brick-layer		
Block-layer		
Roofer	Stratco	34236

REQUIRED ATTACHMENTS

Complete and attach the following checklist (tick to confirm item/form completed), and provide an electronic copy of all information an plans requested on that checklist: Form T-02-PS-01

Application Fee (Deposit): Application Fee of $ _____ (refer to fees and charges sheet)

SIGNATURE

Signature of owner/agent on behalf of and with the authority of the owner_____

Owner ✔ Agent Date: 30 November 2020

Note: If acting "for and on behalf", please read the following declaration before signing:
"I hereby declare that I am authorised to act as Agent of the Owner"

KEY PERSONNEL

Name of Builder: Camel Construction - Tim Hamer	Phone Number:
Postal Address: 78 Canbrea Drive, Christchurch	021 749 374
	Registration Number:
E-mail Address: tim@camelconstruction.co.nz	LBP104038
Name of Craftsman Plumber: Signature Plumbing	Phone Number:
Postal Address: 6 Blake Street, Waimakariri	027 451 4436
	Registration Number:
E-mail Address: signatureplumbing@xtra.co.nz	16161
Name of Craftsman Gasfitter: The Gas Guys	Phone Number:
Postal Address: 366 High Street, Rangiora	03 310 6810
	Registration Number:
E-Mail Address: admin@gasguys.co.nz	16469
Name of Registered Drain-layer: Pipe Rite Drainage	Phone Number:
Postal Address: 83 Youngs Road, RD1, Kaiapoi	021 229 3015
	Registration Number:
E-mail Address: office@piperite.co.nz	17121
Name of Designer: JBH Draughting	Phone Number:
Postal Address: 257 Ravensbourne Road, Dunedin	022 607 3408
	Registration Number:
E-mail Address: jbhdraughting@hotmail.com	113870
Name of Engineer:	Phone Number:
Postal Address:	
	Registration Number:
E-mail Address:	
Name of Electrician: Ezibreeze	Phone Number:
Postal Address: PO Box 705, Rangiora	03 310 6810
	Registration Number:
E-mail Address: admin@ezibreeze.co.nz	E2939

BUILDING CODE ASSESSMENT (Not required for PIM only applications)

Producer Statements: It is intended that the following Producer Statement(s) will be relied upon to certify or verify compliance of the plans, specifications or completed works with the Building Code. **Note:** Applications including a PS 1 or PS 2 must be supplied with a copy of any design calculations.

PS 1 (Design) **PS 2 (Design Review)** **PS 3 (Construction)** **PS 4 (Construction Review)**

The building work will comply with the building code as follows:

Building Code Clause (Identify which clauses will be involved in the building work)		**Means of Compliance** (note that a project may include both Acceptable and Alternative solutions)		
		Acceptable Solution / Verification Method (AS1, AS2, VM1, VM2 etc)	**Alternative Solution** (details verifying compliance required)	**Waiver/ Modification** (Provide sep. details for justification of acceptance)
B1	Structure	N/A ✔ AS1 ✔ VM1 AS2 VM2 AS3 VM3 AS4 VM4	YES	YES
B2	Durability	N/A ✔ AS1 VM1	YES	YES
C1-6	Protection from fire	N/A ✔ AS1 AS2 AS3 AS4 AS5 AS6 AS7 C/VM2	N/A	YES
D1	Access Routes	N/A ✔ AS1 VM1	YES	YES
D2	Mechanical Installations for Access	N/A AS1 VM1 AS2 VM2 AS3 VM3	YES	YES
E1	Surface water	N/A ✔ AS1 ✔ VM1	YES	YES
E2	External moisture	N/A ✔ AS1 VM1 AS2 AS3	YES	YES
E3	Internal moisture	N/A ✔ AS1 VM1	YES	YES
F1	Hazardous agents on site	N/A VM1	YES	YES
F2	Hazardous building materials	N/A ✔ AS1	YES	YES
F3	Hazardous substances and processes	N/A VM1	YES	YES
F4	Safety from falling	N/A ✔ AS1 VM1	YES	YES
F5	Construction and demolition hazards	N/A ✔ AS1 VM1	YES	YES
F6	Lighting for emergency	N/A AS1 VM1	YES	YES
F7	Warning systems	N/A ✔ AS1 VM1	YES	YES
F8	Signs	N/A AS1 VM1	YES	YES
F9	Fencing of swimming pools	N/A AS1 AS2	YES	YES
G1	Personal hygiene	N/A ✔ AS1 VM1	YES	YES
G2	Laundering	N/A ✔ AS1 VM1	YES	YES
G3	Food preparation and prevention of contamination	N/A ✔ AS1 VM1	YES	YES
G4	Ventilation	N/A ✔ AS1 VM1	YES	YES
G5	Interior environment	N/A AS1 VM1	YES	YES
G6	Airborne and impact sound	N/A AS1 VM1	YES	YES
G7	Natural light	N/A ✔ AS1 VM1	YES	YES
G8	Artificial light	N/A ✔ AS1 VM1	YES	YES
G9	Electricity	N/A ✔ AS1 VM1	YES	YES
G10	Piped services	N/A AS1 VM1	YES	YES
G11	Gas as an energy source	N/A ✔ AS1 VM1	YES	YES
G12	Water supplies	N/A ✔ AS1 AS2 VM1	YES	YES
G13	Foul water	N/A ✔ AS1 VM1 ✔ AS2 VM2 AS3 VM4	YES	YES
G14	Industrial liquid waste	N/A AS1 VM1	YES	YES
G15	Solid waste	N/A AS1 VM1	YES	YES
H1	Energy efficiency provisions	N/A ✔ AS1 VM1	YES	YES

COMPLIANCE SCHEDULE (Inspection, Maintenance and Reporting Procedures)

Do not fill in this section if this application is only for a project information memorandum

Are there specified systems in the building? Yes ✔ No

(If there are no specified systems, move on to section 8)

If existing building, please state the Building Warrant of Fitness Number:

Are any specified systems affected by this application? Yes ✔ No

(If yes, continue completing this section of the form, if no move on to section 8).

Total Occupancy Numbers:

Purpose Group *(select all relevant)*

CS	CL	CO	CM	SC	SD	SA	SR	SH	WL	WM	WH	WF	IA	ID

The following systems are existing, being altered, added to, or removed in the course of the building work	Existing	New	Altered	Removed	Inspection performance standards	Maintenance performance standards	Reporting frequency
1: Automatic Systems For Fire Suppression							
2: Automatic Or Manual Emergency Warning Systems							
3/1: Electromagnetic Or Automatic Doors Or Windows							
3/2: Access Control Doors							
3/3: Automatic Fire Doors Or Windows Forming Part Of Firewall							
4: Emergency Lighting Systems							
5: Escape Route Pressurisation Systems							
6: Riser Mains For Use By Fire Services							
7: Automatic Backflow Preventers							

8: Lifts, Escalators							
9: Mechanical Ventilation Or Air Conditioning Systems					Lot 25, 4 Pukekc	Lot 25, 4 Pukeko W	
10: Building Maintenance Units					Amberley	Amberley	
11: Laboratory Fume Cupboards					New Residential	New Residential Dv	
12: Audio Loops Or Other Assistive Listening Systems							
13: Smoke Control Systems							
14/1: Emergency Power Systems							
14/2: Signs Relating To A System Or Feature Specified In Any Clauses Above.							
15/1: Systems For Communicating Spoken Information Intended To Facilitate Evacuation							
15/2: Final Exits And Other Exit Doors							
15/3: Fire Separations Protecting A Means Of Escape							
15/4: Signs For Communicating Information Intended To Facilitate Evacuation							
15/5: Smoke Separations							
16: Cable cars							

RECORD OF TITLE
UNDER LAND TRANSFER ACT 2017
FREEHOLD
Search Copy

R.W. Muir
Registrar-General
of Land

Identifier 713226
Land Registration District Canterbury
Date Issued 19 February 2016

Prior References
95082

Estate	Fee Simple
Area	2246 square metres more or less
Legal Description	Lot 25 Deposited Plan 488914

Registered Owners
Steven Lloyd Olliver and Wendy Joy Anne Olliver

Interests

10237191.1 Consent Notice pursuant to Section 221 Resource Management Act 1991 - 19.2.2016 at 9:47 am

Subject to a right of way and a right to convey water, electricity, telecommunications and computer media and a right to drain water and sewage over part marked P on DP 488914 created by Easement Instrument 10237191.4 - 19.2.2016 at 9:47 am

Appurtenant hereto is a right of way and a right to convey water, electricity, telecommunications and computer media and a right to drain water and sewage created by Easement Instrument 10237191.4 - 19.2.2016 at 9:47 am

The easements created by Easement Instrument 10237191.4 are subject to Section 243 (a) Resource Management Act 1991

Subject to a right to convey telecommunications and computer media (in gross) over part marked P on DP 488914 in favour of Chorus New Zealand Limited created by Easement Instrument 10237191.5 - 19.2.2016 at 9:47 am

The easements created by Easement Instrument 10237191.5 are subject to Section 243 (a) Resource Management Act 1991

Subject to a right to convey electricity (in gross) over part marked P on DP 488914 in favour of MainPower New Zealand Limited created by Easement Instrument 10237191.6 - 19.2.2016 at 9:47 am

The easements created by Easement Instrument 10237191.6 are subject to Section 243 (a) Resource Management Act 1991

Subject to a right to convey water and to drain sewage (in gross) over part marked P on DP 488914 in favour of the Hurunui District Council created by Easement Instrument 10237191.7 - 19.2.2016 at 9:47 am

The easements created by Easement Instrument 10237191.7 are subject to Section 243 (a) Resource Management Act 1991

Land Covenant in Easement Instrument 10237191.8 - 19.2.2016 at 9:47 am (Limited as to Duration)

11830264.2 Mortgage to Bank of New Zealand - 28.8.2020 at 10:32 am

Memorandum from licensed building practitioner: Certificate of design work

Section 45 and section 30c, Building Act 2004

Please fill in the form as fully and correctly as possible.

If there is insufficient room on the form for requested details, please continue on another sheet and attach the additional sheet(s) to this form.

THE BUILDING	
Street address: 4 Pukeko Way	
Suburb:	
Town/City: Hurunui.	Postcode:

THE OWNER(S)		
Name(s): Wendy & Steven Olliver.		
Mailing address:		
Suburb:	PO Box/Private Bag:	
Town/City:		Postcode: 8548
Phone number:	Email address:	

IDENTIFICATION OF DESIGN WORK THAT IS RESTRICTED BUILDING WORK

I Justin Hannon carried out/supervised the following design work that is restricted building work

PRIMARY STRUCTURE

Design work that is restricted building work	Description of restricted building work	Carried out or supervised	Reference to plans and specifications
Tick ✓	If appropriate, provide details of the restricted building work	Tick ✓ whether you carried out this design work or supervised someone else carrying out this design work	If appropriate, specify references
Foundations and subfloor framing ✓	Concrete slab on ground.	◉ Carried out ○ Supervised	Sht 04 & 05.
Walls ✓	Timber framed walls. Internal wall linings.	◉ Carried out ○ Supervised	Sht 11
Roof ✓	Truss layout & Purlins.	◉ Carried out ◉ Supervised	Truss manufacturers statement & Layout / Fixing Details (Spec) Sht 11
Columns and beams ○		○ Carried out ○ Supervised	
Bracing ✓	Wall sheet Bracing. Roof Cross bracing. Dragon Ties.	◉ Carried out ○ Supervised	Sht 06,08 & Spec.
Other ○		○ Carried out ○ Supervised	

EXTERNAL MOISTURE MANAGEMENT SYSTEMS			
Design work that is restricted building work	**Description of restricted building work**	**Carried out or supervised**	**Reference to plans and specifications**
Tick ✓	If appropriate, provide details of the restricted building work	Tick ✓ whether you carried out this design work or supervised someone else carrying out this design work	If appropriate, specify references
Damp proofing ✓	DPC under bottom plates. DPM Under slab.	◉ Carried out ○ Supervised	Sht 04
Roof cladding or roof cladding system ✓	Profiled steel roof cladding on roof underlay.	◉ Carried out ○ Supervised	Sht 06
Ventilation system (for example, subfloor or cavity) ✓	Wall cavity systems.	◉ Carried out ○ Supervised	Sht 11 & Spec.
Wall cladding or wall cladding system ✓	Linea weatherboards over 20nom cavity.	◉ Carried out ○ Supervised	Sht 11 & Spec.
Waterproofing ○		○ Carried out ○ Supervised	
Other ○		○ Carried out ○ Supervised	

FIRE SAFETY SYSTEMS			
Design work that is restricted building work	**Description of restricted building work**	**Carried out or supervised**	**Reference to plans and specifications**
Tick ✓ if appropriate	If appropriate, provide details of the restricted building work	Tick ✓ whether you carried out this design work or supervised someone else carrying out this design work	If appropriate, specify references
Emergency warning systems ◯ Evacuation and fire-service operation systems Suppression or control systems Other		◯ Carried out ◯ Supervised	
Note: The design of fire safety systems is only restricted building work when it involves small-to-medium apartment buildings as defined by the Building (Definition of Restricted Building Work) Order 2011.			

WAIVERS AND MODIFICATIONS

Waivers or modifications of the Building Code are required. ◯ Yes ◉ No

If Yes, provide details of the waivers or modifications below:

Clause	**Waiver/modification required**
List relevant clause numbers of building code	Specify nature of waiver or modification of building code required

ISSUED BY

Name and contact details of the licensed building practitioner who is licensed to carry out or supervise design work that is restricted building work.

Name: Justin Hannon	LBP or Registration number: BP113870
The practitioner is a: (●) Design LBP ( ) Registered architect ( ) Chartered professional engineer	
Mailing address (if different from below):	
Street address/Registered office: 257 Ravensbourne rd	
Suburb: Ravensbourne	Town/City: DUNEDIN
PO Box/Private Bag:	Postcode: 9022
Phone number:	Mobile: 0226073408
After hours:	Fax:
Email address: JBHDRAUGHTING@HOTMAIL.CO.NZ	Website:

DECLARATION

I Justin Hannon certify that the design work that is restricted building work identified on this form:

- Complies with the building code, or
- Complies with the building code subject to any waiver or modification of the building code recorded on this form

Signature: _____

Date: 25-11-2020

HURUNUI
District Council

Planning Check or Project Information Memorandum Declaration

In order for the Council to undertake a planning check or project information memorandum (PIM) to identify any restrictions that relate to the proposed building project, the Council requires basic information with respect to the requirements of the District Plan. As such the applicant (or agent) is required to complete the relevant sections of this declaration form. Please note that it is important that the applicant provide correct information in order for the Council to provide an accurate planning check or issue a PIM.

Applicant's Name	Steven & Wendy Olliver
Project Location	Lot 25, 4 Pukeko Way, Amberley
Proposal	New Residential Dwelling

Please answer the following questions by marking the relevant box.

1. Will the proposed building be located within **50 metres of a forestry plantation** on a separate lot under different ownership?

   Yes ☐ No ☑

2. Will the proposed building require **earthworks** to be carried out within **20 metres** of any river, **50 metres** of any wetland, or **100 metres** from any lake?

   Yes ☐ No ☑

3. Will the proposed building be located:

   a. within **500 metres** of an intensive farming activity on a separate property?
      Yes ☐ No ☑
   b. within **500 metres** of a sewage treatment facility, including effluent ponds for on-farm waste disposal and land based effluent disposal areas on a separate property?
      Yes ☐ No ☑
   c. within **500 metres** of the operational area of a quarry or mine (excluding riverbed or on farm gravel extraction) on a separate property?
      Yes ☐ No ☑
   d. within **1km** of any frost control fan?
      Yes ☐ No ☑

4. Will the building be **closer than 100 metres** from a dwellinghouse or principal building on a separate property?

   Yes ☐ No ☑

5. Will the building be located on a **ridgeline**, where it will be visible against a backdrop of sky when viewed from any strategic arterial, district arterial, collector or Lake Sumner Road (including unformed sections), that are **within 1km** of the proposed building? (*Strategic arterial, district arterial and collector roads are listed overleaf*.)

   Yes ☐ No ☑

6. Is there an existing **accessway**, which will be used for this building, which complies with the District Plan standards? (An accessway is the area **between** the edge of the road formation and the boundary to the property)

   Yes ☐ No ☐ Not sure ☑

7. Is the site currently, or previously, or more likely than not to have been used for an activity on the Hazardous Activities and Industries List (HAIL) as attached to this form?

   Yes ☐ No ☑

8. Please complete this question if the building is to be located within the **Hanmer Basin Management Area**

   Cladding materials _____

   Walls Colour _____

   Roof Colour _____

   Trim Colour _____

DECLARATION

I declare that the information provided on this form is correct. I understand that if I provide false or misleading information, then the planning check undertaken by the Council may provide incorrect information with respect to compliance of the project with the District Plan.

Signature  Date 30 November 2020

Strategic arterial, District arterial & Collector roads within the Hurunui District:

Allandale Road, Amberley Beach Road, Ashworths Road (SH1), Balcairn Amberley Road, Balmoral Station Road, Claverley Rd (between SH1 Conway Flat Rd), Culverden Road (SH7), Domett Road (SH1), Douglas Road, Flintoff Mouse Point Road, Gemmells Road, Glasnevin Road (SH1), Gore Bay Road, Greta Road (SH1), Hanmer Springs Road (SH7A), Hawarden Waikari Road, Horsley Downs Road, Hundalee Road (SH1), Hursley Terrace Road, Inland Road, Karaka Road (SH7), Kings Road, Lake Sumner Road (between Horsley Downs Rd and Powers Road), Lawcocks Road, Leader Road East, Leader Road West, Leithfield Road, Leslie Hills Road, Lewis Pass Road (SH7), Motunau Beach Road, Mouse Point Road (SH7), Mt Brown Road, Mt Palm Road, Munro Road, Omihi Road (SH1), Parnassus Road (SH1), Pyramid Valley Road, Ram Paddock Road (between the Mt Brown Rd and Georges Rd), Rotherham Road North (SH7), Rotherham Road South (SH7), Scargill Valley Road, School Road, St Leonards Road, Stonyhurst Road (between SH1 and Blythe Rd), Station Road, Top Pahau Ford Road, Waikari Valley Road, Waipara Flat Road (SH7).

Hazardous Activities and Industries List (HAIL)

October 2011

Ministry for the Environment
Manatū Mō Te Taiao

A Chemical manufacture, application and bulk storage

1. Agrichemicals including commercial premises used by spray contractors for filling, storing or washing out tanks for agrichemical application

2. Chemical manufacture, formulation or bulk storage

3. Commercial analytical laboratory sites

4. Corrosives including formulation or bulk storage

5. Dry-cleaning plants including dry-cleaning premises or the bulk storage of dry-cleaning solvents

6. Fertiliser manufacture or bulk storage

7. Gasworks including the manufacture of gas from coal or oil feedstocks

8. Livestock dip or spray race operations

9. Paint manufacture or formulation (excluding retail paint stores)

10. Persistent pesticide bulk storage or use including sport turfs, market gardens, orchards, glass houses or spray sheds

11. Pest control including the premises of commercial pest control operators or any authorities that carry out pest control where bulk storage or preparation of pesticide occurs, including preparation of poisoned baits or filling or washing of tanks for pesticide application

12. Pesticide manufacture (including animal poisons, insecticides, fungicides or herbicides) including the commercial manufacturing, blending, mixing or formulating of pesticides

13. Petroleum or petrochemical industries including a petroleum depot, terminal, blending plant or refinery, or facilities for recovery, reprocessing or recycling petroleum-based materials, or bulk storage of petroleum or petrochemicals above or below ground

14. Pharmaceutical manufacture including the commercial manufacture, blending, mixing or formulation of pharmaceuticals, including animal remedies or the manufacturing of illicit drugs with the potential for environmental discharges

15. Printing including commercial printing using metal type, inks, dyes, or solvents (excluding photocopy shops)

16. Skin or wool processing including a tannery or fellmongery, or any other commercial facility for hide curing, drying, scouring or finishing or storing wool or leather products

17. Storage tanks or drums for fuel, chemicals or liquid waste

18. Wood treatment or preservation including the commercial use of anti-sapstain chemicals during milling, or bulk storage of treated timber outside

B Electrical and electronic works, power generation and transmission

1. Batteries including the commercial assembling, disassembling, manufacturing or recycling of batteries (but excluding retail battery stores)

2. Electrical transformers including the manufacturing, repairing or disposing of electrical transformers or other heavy electrical equipment

3. Electronics including the commercial manufacturing, reconditioning or recycling of computers, televisions and other electronic devices

4. Power stations, substations or switchyards

C Explosives and ordinances production, storage and use

1. Explosive or ordinance production, maintenance, dismantling, disposal, bulk storage or re-packaging

2. Gun clubs or rifle ranges, including clay targets clubs that use lead munitions outdoors

3. Training areas set aside exclusively or primarily for the detonation of explosive ammunition

D Metal extraction, refining and reprocessing, storage and use

1. Abrasive blasting including abrasive blast cleaning (excluding cleaning carried out in fully enclosed booths) or the disposal of abrasive blasting material

2. Foundry operations including the commercial production of metal products by injecting or pouring molten metal into moulds

3. Metal treatment or coating including polishing, anodising, galvanising, pickling, electroplating, or heat treatment or finishing using cyanide compounds

4. Metalliferous ore processing including the chemical or physical extraction of metals, including smelting, refining, fusing or refining metals

5. Engineering workshops with metal fabrication

E Mineral extraction, refining and reprocessing, storage and use

1. Asbestos products manufacture or disposal including sites with buildings containing asbestos products known to be in a deteriorated condition

2. Asphalt or bitumen manufacture or bulk storage (excluding single-use sites used by a mobile asphalt plant)

3. Cement or lime manufacture using a kiln including the storage of wastes from the manufacturing process

4. Commercial concrete manufacture or commercial cement storage

5. Coal or coke yards

6. Hydrocarbon exploration or production including well sites or flare pits

7. Mining industries (excluding gravel extraction) including exposure of faces or release of groundwater containing hazardous contaminants, or the storage of hazardous wastes including waste dumps or dam tailings

F Vehicle refuelling, service and repair

1. Airports including fuel storage, workshops, washdown areas, or fire practice areas

2. Brake lining manufacturers, repairers or recyclers

3. Engine reconditioning workshops

4. Motor vehicle workshops

5. Port activities including dry docks or marine vessel maintenance facilities

6. Railway yards including goods-handling yards, workshops, refuelling facilities or maintenance areas

7. Service stations including retail or commercial refuelling facilities

8. Transport depots or yards including areas used for refuelling or the bulk storage of hazardous substances

G Cemeteries and waste recycling, treatment and disposal

1. Cemeteries

2. Drum or tank reconditioning or recycling

3. Landfill sites

4. Scrap yards including automotive dismantling, wrecking or scrap metal yards

5. Waste disposal to land (excluding where biosolids have been used as soil conditioners)

6. Waste recycling or waste or wastewater treatment

H Any land that has been subject to the migration of hazardous substances from adjacent land in sufficient quantity that it could be a risk to human health or the environment

I Any other land that has been subject to the intentional or accidental release of a hazardous substance in sufficient quantity that it could be a risk to human health or the environment